City Council Meeting Agenda
City Council Chambers, City Hall, 612 N. Main Street
February 18, 2025

1. **6:00 PM Call to Order**
2. **Pledge Of Allegiance**
3. **Invocation: Northridge Baptist**
4. **Roll Call**
5. **Approval Of Consent Agenda Items**
   Items appearing on the Consent Agenda may be removed by a City Council Member for discussion at the beginning of the formal agenda items.

   A. **City Council Minutes**

   B. **Committee Reports**

   C. **Department Reports**

   D. **Raffle Permits**

   E. **Purchase of 2025 Dodge Durango for the Police Department**

   F. **Purchase of Islander Prime Fuel Management System to Midwest Petroleum Equipment Project #2025-22**

   G. **Authorization to Designate $5,750,000 of General Fund Reserves towards Future Capital Projects**

   H. **Authorization to Designate $600,000 in Entertainment Tax Reserves towards the Plaza Expansion Project**

   I. **Designate $970 in Park Fund Reserves for Disc Golf Signage Improvements**

   J. **Recommendation by Mayor Jordan Hanson to Appoint Bryce Berletic to the Park & Recreation board to fill an unexpired term to run from March 2025- June 2025.**

   K. **Property Tax Abatement for 2024 Taxes Payable in 2025**
      The assessment should have been owner occupied

   L. **Change Order #1 to Soukup Construction Inc. for Marina Improvements Project #2023-3**

   M. **Set date of March 3, 2025 for Hearing and Action on the Application to Transfer RL-5756 Retail (on-sale) Liquor License from Flats on Havens LLC dba Flats on Havens,1525 W Havens Ave to Gjocaj Inc dba Amore Italian Ristorante & Bar, 1525 W Havens Ave**

   N. **Pay Estimates**

O. Approve Bills, Payroll, Salary Adjustments and New Hires, and Authorize Payment of Recurring and Other Expenses in Advance as Approved by the Finance Officer

6. Motion To Approve, Request Public Comment, Roll Call

7. Citizens Input

If you need to address the Mayor and members of the City Council on an item that was not on the agenda, excluding personnel items, please come forward to the podium and state your name and your concern. Presentations are limited to three minutes. Items will be considered but no action will be taken at this time.

8. Mayor & City Council Discussion Items

9. BOARD OF ADJUSTMENT: Entertain a Motion For The City Council To Recess And Sit As The Board Of Adjustment

A. Action to Set Date for Board of Adjustment Hearing 3-3-25

Todd & Kay Long have applied for a Variance Permit for the following:

1. Minimum lot width for platted subdivision, nonresidential of 44.57' vs 100' for Lot 3A, Block 1
2. Minimum lot width for platted subdivision, nonresidential of 44.57' vs 100' for Lot 4A, Block 1
3. Minimum lot width for platted subdivision, nonresidential of 44.57' vs 100' for Lot 3A, Block 4.

This is located for the shelterbelt west of 40692 Chase Ct, to be legally described Lots 3A and 4A, Block 1 and Lot 3A, Block 4, all of Circle K Ranch Second Addition, a subdivision of the SE 1/4 of Section 6, T 103 N, R 60 W of the 5th P.M., Davison County, South Dakota. The property is zoned UD Urban Development District.

Todd & Nancy Boyd have applied for a Variance Permit for rear yard setback (road side) of 17'-10" vs 30'. This is located at 155 S Harmon Dr, legally described as Lots 78 & 79 and the East 26' of Lot 80 of Indian Head Subdivision Lake Mitchell Development Plan, SW ¼ of Section 4, T 103 N, R 60 W of the 5th P.M., City of Mitchell, Davison County, South Dakota. The property is zoned RL Lake Residential District.

10. RECONVENE AS CITY COUNCIL: Entertain a Motion For The Board of Adjustment To Adjourn And The City Council To Reconvene In Regular Session

11. Action to Approve Resolution #R2025-11,Plat of Lots 2B, 2C and 2D, a subdivision of Lot 2, Block 4 of Westwood First Addition, a subdivision of the NW 1/4 of Section 16, T 103 N, R 60 W of the 5th P.M., portions of which lie within the City of Mitchell, Davison County, South Dakota

12. Action to Proceed with Replacement of Corn Palace Seating with Hussy Fusion Seats from Combined Building Specialties off of the Sourcewell Contract #81523

13. Action to Approve Agreement #A2025-16, Utility Easement License for Randall Regional Water Transmission Line

14. **Action to Approve Agreement #A2025-17, Cadwell Park Infield Improvements with SPN & Associates, Project #2025-23**

15. **Action to Approve Agreement #A2025-18, Schematic Design for Corn Palace Renovation with Schemmer**

16. **Action to Award Hitchcock Park Pickleball Courts Project #2023-14**

17. **Action to Award Bid for Mitchell Airport Revenue Producing Hangar**

18. **Designate Golf Fund Reserves for the following Projects:**

    - **$50,000 towards future Golf Cart Replacements**
    - **$250,000 towards Golf Course Phase III project**

19. **Discussion on Unbudgeted Requests for the 2025 Supplemental Budget.**

    - **Tennis Court Resurfacing and New Lights in the amount of $783,686**
    - **Hitchcock Park Lighting Project in the amount of $326,793**
    - **Ice Arena Roof Project in the amount of $1,500,000**
    - **Additional Hangar at the airport $100,000**
    - **Corn Palace Seat Replacements $550,000**
    - **Additional Trees Purchase $10,000**
    - **Concession Stand Upgrades at Soccer Complex $15,000**

20. **Motion to Enter into Executive Session According to SDCL 1-25-2 (3) Legal.**

21. **Adjourn**

Individuals with disabilities who require special assistance to take part in this meeting may contact one of the following at City Hall (605) 995-8420 at least 24 hours prior to the meeting with requests for assistance: Human Resources Officer or the City Administrator.

REGULAR MEETING OF THE CITY COUNCIL
COUNCIL CHAMBERS, CITY HALL
MITCHELL, SOUTH DAKOTA

February 3, 2025
6:00 P.M.

PRESENT: Marty Barington, Mike Bathke, John Doescher, Tim Goldammer, Kevin McCardle, Dan Sabers, Jeffrey Smith, Susan Tjarks

ABSENT:

PRESIDING: Mayor Jordan Hanson

Council Member Smith is present by phone.

AGENDA:

Moved by McCardle, seconded by Goldammer, to approve the following items on the consent agenda:

a. City Council Minutes
   1. City Council January 21, 2025
b. Committee Reports
   1. Planning Commission January 13, 2025
   2. Planning Commission January 27, 2025 (unsigned)
c. Raffle Permits
   1. Dakota Wesleyan University with the drawings to be held on February 14 and 15, 2025
   2. Pheasants Forever #872 with the drawing to be held on June 2, 2025
   3. VFW Post 2750 with the drawing to be held February-July 2025
d. Surplus items to be sold on Purple Wave or traded-in-Parks Department
e. Purchase of mower for Parks off of Sourcewell contract in the amount of $71,753.67
f. Purchase of Bobcat toolcat for Parks off of Sourcewell contract in the amount of $79,726.33
g. Purchase of air compressor off of Sourcewell contract, Project #2025-16 in the amount of $29,429.44
h. Purchase of sheepsfoot soil compactor off of Sourcewell contract, Project #2025-21 in the amount of $136,693.00
i. Amend Resolution #R2024-83, 2025 Compensation & Classification Plan
j. Property tax abatements for 2024 taxes payable in 2025
k. Change Order #2 for 3rd & Main Streetscape Improvements Project #2022-26 increasing the contract amount by $44,546.85 to Schoenfelder Construction adjust contract amount to $1,520,099.25
l. Change Order #3 for North Harmon Sanitary Sewer Outfall Project #2023-06 increasing the contract amount by $17,770.00 to Halme Inc adjust contract amount to $3,347,607.25
m. Set date for bid opening, 1:30 p.m., February 5, 2025 for Airport Hangar Project AIP '32

n. Set date for bid opening, 2:00 p.m., February 11, 2025 for Hitchcock Park Pickleball Courts Project #2023-14

o. Pay Estimates February 3, 2025

Pay Estimate #35 in the amount of $5,689.50 for Lake Mitchell-Phase II #2021-20 contracted to Barr Engineering

Pay Estimate #7 in the amount of $210,445.77 for Recycling Building #2021-30 contracted to WS Construction Management

Pay Estimate #26 in the amount of $5,248.42 for Recycling Building #2021-30 contracted to Helms & Associates

Pay Estimate #4 in the amount of $2,840.25 for Waste Water Treatment Plant-Phase II #2022-01 contracted to GeoTek Engineering

Pay Estimate #3 in the amount of $155,016.86 for Waste Water Treatment Plant-Phase II #2022-01 contracted to First Rate Excavate

Pay Estimate #18 in the amount of $584.24 for 23rd & Ohlman Lift Station #2022-03 contracted to SPN & Associates

Pay Estimate #18 in the amount of $2,041.00 for 1st/7th & Main Traffic Signals #2022-08 contracted to HR Green

Pay Estimate #19 in the amount of $12,877.50 for 1st/7th & Main Traffic Signals #2022-08 contracted to HR Green

Pay Estimate #7 in the amount of $93,839.73 for 3rd & Main Streetscape #2022-26 contracted to Schoenfelder Construction

Pay Estimate #20 in the amount of $3,850.00 for Lake Mitchell Jetty & Marina #2023-03 contracted to Brosz Engineering

Pay Estimate #4 in the amount of $262,384.94 for North Harmon Sanitary Sewer Outfall #2023-06 contracted to Halme Inc

Pay Estimate #19 in the amount of $25,701.57 for North Harmon Sanitary Sewer Outfall #2023-06 contracted to SPN & Associates

Pay Estimate #7 in the amount of $4,978.75 for Hitchcock Pickleball Courts #2023-14 contracted to SPN & Associates

Pay Estimate #17 in the amount of $431.74 for Ohlman & South Harmon Lift Station #2023-16 contracted to SPN & Associates

Pay Estimate #3 in the amount of $24,014.80 for Railroad & Main Street #2024-21 contracted to Schoenfelder Construction

Pay Estimate #6 in the amount of $1,856.15 for Airport Hangar Design AIP '32 contracted to Helms & Associates

Pay Estimate #2 in the amount of $6,150.85 for Airport Runway 18/36 Reconstruction AIP '34 contracted to Helms & Associates

p. Approve Bills, Payroll, Salary Adjustments and New Employee Hires and Authorize Payment of Recurring and other expenses in advance as approved by the Finance Officer

PAYROLL JANUARY 5, 2025 – JANUARY 18, 2025: City Council $3,735.28, Mayor $1,614.58, City Administrator $6,841.52, Administrative Boards $2,442.65, Attorney $5,601.88, Finance $15,144.44, Human Resources $4,601.44, Municipal Building $3,555.36, Information Technology $3,453.08, Police $84,527.73, Traffic $5,361.10, Fire $38,391.70, Street $34,649.38, Public Works $26,402.62, Cemetery $5,781.81, Animal Control $2,370.88, Library $17,113.44, Recreation &

Aquatics $6,914.18, Recreation Center $19,103.65, Sports Complexes $11,280.51, Parks $13,921.96, Supervision $4,418.10, E911 $26,026.73, Palace Transit $31,198.76, JVCC $2,139.88, Nutrition $5,122.66, Airport $2,669.37, Water Distribution $15,580.34, Sewer $15,160.30, Recycling Program $7,801.10, Waste Collection $6,960.27, Landfill $10,140.91, Corn Palace $26,205.50, Golf Course $4,304.37, Emergency Medical Services $36,938.53

NEW HIRES:

JVCC: Betty Anderson-$15.20

PALACE TRANSIT: Jade Shouldis-$12.70, Jeffery Hanson-$22.036

POLICE: Samson McKissack-$30.229

RECREATION & AQUATICS: Tenley Peterson-$11.50

WATER DISTRIBUTION: Dick Figland-$17.20

SALARY ADJUSTMENTS:

CORN PALACE: Craig Stucky-$70,791.00

FIRE: Shannon Sandoval-$25.945

RECREATION CENTER: Adam Fosness-$22.258

STREET: Luke Nagel-$27.940

TERMINATIONS:

CORN PALACE: Kinsley Herges, Peightyn Sullivan

JVCC: Kimberly Burg

WARRANTS: AAA Collections, Collections Fees-$9.60; Aaron Hieb, Reimbursement-$45.00; AFLAC, Aflac Withholding-$10,366.22; AFSCME Council 65, Union Dues-$504.00; Al's Engraving, Supplies-$15.90; Alex Dagen, Reimbursement-$45.00; Amazon Capital Services, Supplies-$2,424.96; American Garage Door, Maintenance-$120.00; American Legal Publishing, City Ordinances-$242.59; Amy Wilcox or Mary Deicher, Refund-$95.86; Andrea Hamilton, Reimbursement-$45.00; Andrew Schneider, Reimbursement-$90.00; Aqua-Pure, Supplies-$1,800.00; Austin Resick, Reimbursed-$425.05; Avera Occupational Medicine, Screenings-$2,157.00; Axon Enterprise, Supplies-$46,193.04; B&B Upholstery, Repairs-$340.00; Bailey Metal Fabricators, Supplies-$106.17; Baker & Taylor, Books-$21.71; Barr Engineering, 2021-20 P.E. #PH2-35-$5,689.50; Bender Sewer & Drain, Supplies-$90.00; Big Daddy D's, Contract Services-$4,429.80; BMI, Annual Fee-$446.00; Brad Gates, Reimbursement-$45.00; Brady Andera,

Reimbursement-$45.00; Brian Daughters, Reimbursement-$45.00; Brosz Engineering, 2023-3 P.E. #20-$3,850.00; Carquest Auto Parts, Supplies-$166.54; CDW Government, Supplies-$170.66; Central Electric, Utilities-$11,494.16; Chad Cody, Reimbursement-$45.00; Chesterman, Supplies-$1,552.95; CHR Solutions, Billings-$3,763.12; CHS Farmers Alliance, Supplies-$2,515.05; City of Mitchell, Cash Change-$5,000.00; City of Mitchell, Golf Course Deductions-$1,244.42; City of Mitchell, Recreation Deductions-$2,412.31; CK Bicycles & Locks, Repair-$54.00; Column Software, Advertising-$16.72; Connor Davis, Reimbursement-$45.00; Core & Main, Supplies-$646.20; Core-Mark US, Supplies-$7,323.49; Corn Palace, Supplies-$15.00; County Fair, Supplies-$61.83; Craig Stucky, Reimbursement-$45.00; Dakota Pump, Supplies-$556.65; Dakota Riptide, Sports Authority Promo-$4,000.00; Dakota Supply Group, Maintenance-$170.39; Dan London, Reimbursement-$45.00; Dan Pollreisz, Reimbursement-$45.00; Data443 Risk Mitigation, Subscription-$268.18; Dave Sietsema, Reimbursement-$205.02; Delta Dental Plan of South Dakota, Dental Insurance-$17,194.64; Dennis Geidel, Reimbursement-$45.00; Department of Social Services, Child Support-$633.69; Diesel Laptops, Renewal-$4,425.00; Dimock Dairy, Supplies-$351.00; DMC Wear Parts, Supplies-$3,325.39; Doug Cunningham, Reimbursement-$45.00; Dakota Wesleyan University Men's Soccer, Sports Authority Promo-$3,500.00; Dakota Wesleyan University Women's Basketball, Sports Authority Promo-$3,000.00; Elfstrand's Ace Hardware, Supplies-$190.94; Environmental Equipment & Service, Supplies-$167.50; Eric Hieb, Contract Services-$5,264.28; First National Bank Omaha, Loan Payment-$7,469.35; First Rate Excavate, 2022-1 P.E. #3-$155,016.86; Fisher Scientific, Supplies-$220.32; Fleetpride, Supplies-$660.60; Flowbird America, Alarm Monitoring-$69.00; Geotek Engineering & Testing, 2022-1 P.E. #4A-$2,840.25; Halme, 2023-6 P.E. #4-$262,384.94; Harve's Sport Shop, Supplies-$2,417.89; Hatwan's Heating and Cooling, Maintenance-$662.47; Hawkins, Supplies-$80.00; Helms and Associates, 2021-30 P.E. #26-$13,255.42; Henry Schein, Supplies-$531.87; Honda of Mitchell, Supplies-$234.90; HR Green, 2022-8 P.E. #18-$14,918.50; IMSA, Membership Dues-$200.00; Ingram Library Services, Books-$1,015.36; Innovative Office Solution, Supplies-$220.53; Interstate Office Products, Supplies-$32.83; Interstate Power Systems, Supplies-$201.25; Iverson, Supplies-$139.05; Jamie Henkel, Reimbursement-$45.00; Jaylon Tollefson, Reimbursement-$45.00; Jeff Hanson, Reimbursement-$128.00; Jen Lauritsen, Refund-$350.00; Jesse Schlimgen, Reimbursement-$45.00; Joe Dolezal, Reimbursement-$45.00; Joe Galpin, Reimbursement-$45.00; Joe Schroeder, Reimbursement-$45.00; Joelle Dammann, Reimbursement-$45.00; John Hegg, Reimbursement-$45.00; Johnson Controls, Supplies-$939.00; Johnson, Janklow & Abdalla, Refund-$865.00; Jon Thurman, Reimbursement-$45.00; Jon Vermeulen, Reimbursement-$45.00; Jones Supplies, Supplies-$1,528.62; Jordan Hanson, Reimbursement-$45.00; Joseph King, Reimbursement-$45.00; Justin Stoltenburg, Travel-$20.00; Kathy Hanks, Reimbursement-$45.00; Kevin Devries, Reimbursement-$45.00; Kevin Dykes, Reimbursement-$45.00; Kevin Kenkel, Reimbursement-$45.00; Kevin Roth, Reimbursement-$45.00; Kevin Sibson, Reimbursement-$45.00; Larry's I-90 Service, Maintenance-$179.26; Liz Kitchens, Reimbursement-$45.00; Luke Nagel, Reimbursement-$99.98; M&T Fire and Safety, Supplies-$241.80; Make it Mine Designs, Supplies-$74.50; Maximum Promotions, Repairs-$60.00; Melissa Hobaugh, Reimbursement-$45.00; Menard's, Supplies-$1,487.25; Michael Leach, Reimbursement-$45.00; Michelle Bathke, Reimbursement-$45.00; Mid-States Organized Crime, Membership Dues-$200.00; Midcontinent Communication, Utilities-$20.62; Midstates Equipment & Supplies, Supplies-$33,218.77; Midwest Fire & Safety, Supplies-$292.50; Midwest Oil, Supplies-$5,544.42; Midwest Turf & Irrigation, Supplies-$1,536.22; Mike Carpentier, CDL Training-$150.00; Millennium Recycling, Single Stream Fee-

$1,644.05; Minnesota Valley Testing, Lab Fees-$2,140.00; Mitchell Area Chamber of Commerce, Banquet Tickets-$80.00; Mitchell Exchange Club, 2025 Fireworks Allocation-$10,000.00; Mitchell Figure Skating, Sports Authority Promo-$750.00; Mitchell Iron & Supply, Supplies-$305.23; Mitchell Music Boosters, Sports Authority Promo-$4,000.00; Mitchell Plumbing & Heating, Repairs-$3,732.02; Mitchell United Way, United Way Deductions-$196.00; Mueller Lumber, Supplies-$77.32; Muth Electric, Maintenance-$481.78; Napa Central, Deposit-$84.55; Nate Hegg, Reimbursement-$45.00; Nolan Tegels, Reimbursement-$45.00; Northwest Pipe Fittings, Supplies-$410.98; Northwestern Energy, Utilities-$19,592.36; O'Connor, Maintenance-$954.86; Optilegra, Vision Plan Deductions-$259.84; Overdrive, Ebooks-$1,525.26; Pepsi Cola, Supplies-$889.30; Peterbilt of Sioux Falls, Supplies-$6,018.05; Premier Pest Control, Maintenance-$675.00; Public Health Laboratory, Lab Testing-$345.00; Qualified Presort Service, Postage-$608.59; Robert McCardle, Reimbursement-$45.00; Roger Prewett II, Reimbursement-$45.00; Runnings Supply, Supplies-$894.04; Ryland Devries, Reimbursement-$45.00; Saber Shred Solutions, Supplies-$6,899.60; Sanford Health Mitchell, Advertising-$80.00; Sanitation Products, Supplies-$37.74; Schoenfelder Construction, 2022-26 P.E. #7-$117,854.53; Schumacher Elevator, Maintenance-$242.73; South Dakota Municipal League, Membership-$25.00; South Dakota Retirement System, Retirement Contributions-$126,443.10; South Dakota-Supplemental Retirement, Supplemental Retirement-$3,330.00; South Dakota-Supplemental Roth 457, Roth 457 Contributions-2,117.50; South Dakota Musical Education, Sports Authority Promo-$1,000.00; Shannon Sandoval, Reimbursement-$45.00; Shawn Lachnit, Reimbursement-$30.00; Sign Pro, Supplies-$139.00; South Dakota 811m Message Fees-$78.75; Special Olympics South Dakota, Sports Authority Promo-$12,000.00; SPN & Associates, 2022-3 P.E. #18-$31,696.30; Standard Insurance, Life Insurance-$2,671.30; Staples, Supplies-$748.18; Stephanie Ellwein, Reimbursement-$45.00; Steve Anderson, Reimbursement-$45.00; Streicher's, Supplies-$556.00; Sturdevants Auto Value Mitchell, Supplies-$533.45; Subway, Planning Commission Meals-$53.94; Sun Gold Sports, Supplies-$140.00; Terry Johnson, Reimbursement-$90.00; Tessiers Mechanical, Maintenance-$804.49; Thomas Gulledge, Reimbursement-$45.00; Thomas Holleman, Reimbursement-$45.00; Thomas L Price, Screening-$350.00; Thomas Schuman, Reimbursement-$45.00; Thomsen Enterprises, Interest Paid-$82,500.00; Thune True Value & Appliance, Supplies-$170.51; Titan Machinery, Supplies-$70.86; TMA Stores, Repair-$47.83; Todd Cavanaugh, Reimbursement-$45.00; Traditions Prepared Meals, Supplies-$4,000.41; Transource, Supplies-$8,867.87; Transwest - Sioux Falls, Supplies-$1,908.47; Tyler Vetch, Reimbursement-$45.00; Tylor Peterson, Reimbursement-$45.00; Upper Midwest Garage Door, Repair-$230.51; Verizon Wireless, Utilities-$340.19; Vestis, Maintenance-$386.59; Victor Stanley, Supplies-$47,027.00; Walmart/Capital One, Supplies-$286.84; Wanda Graves, Reimbursement-$45.00; Watertown Wholesale, Supplies-$142.13; Weisser's Heating & Air, Maintenance-$1,411.23; WS Construction Management, 2021-30 P.E. #7-$210,445.77; Zach Dalrymple, Reimbursement-$45.00; Wellmark Blue Cross Blue Shield, Administration, Prescription, Medical-$238,364.55

Members present voting aye: Barington, Bathke, Doescher, Goldammer, McCardle, Sabers, Smith, Tjarks. Members present voting nay: none. Motion carried.

CITIZENS INPUT:

Library Director, Kevin Kenkel, reviewed the Mitchell Public Library's end of the year numbers and

statistics.

MAYOR & CITY COUNCIL DISCUSSION ITEMS:

Mayor Jordan Hanson read a letter received today from Randall Rural Water stating the landowner easements are complete.

DISCUSSION:

Options for chairs for Corn Palace seating were reviewed from two different manufacturers, Hussey Seating from Combined Building Specialties and Irwin Seating Company.

HEARING:

It was advised that this is the date and time set for hearing on the application to transfer RL-5353 Retail (on-sale) Liquor License from The Back 40 LLC dba The Back 40 Mitchell, 511 North Main Street to LAB, LLC dba LAB LLC, 501 South Sanborn Blvd (This license will be inactive). Notice of hearing has been given and affidavit of publication is on file. Moved by McCardle, seconded by Goldammer, to approve said application. Motion carried.

CONSIDER APPROVAL:

Moved by Tjarks, seconded by McCardle, to approve a release of easement in the Woods 1st Addition, Lot 5, Block 6. Motion carried.

Moved by Tjarks, seconded by Barington, to approve United Sanitation Services to haul sanitary waste to Mitchell Regional Landfill. Motion carried.

Moved by McCardle, seconded by Sabers, to approve Agreement #A2025-14, An Agreement between the City and the State of South Dakota and FEMA for a Hazard Mitigation Assistance (HMA) Building Resilient Infrastructure and Communities (BRIC) Grant Application for the 504 W Ash Ave Property Acquisition Project. Motion carried.

Moved by Tjarks, seconded by Goldammer, to approve Agreement #A2025-15, An Agreement between the City and the State of South Dakota and FEMA for a Hazard Mitigation Assistance (HMA) Building Resilient Infrastructure and Communities (BRIC) Grant Application for the 512 & 514 W Ash Ave Property Acquisition Project. Motion carried.

RESOLUTIONS:

Moved by Goldammer, seconded by Barington, to approve Resolution #R2025-09, Appointing Applicant Agent for Hazard Mitigation Assistance (HMA) Building Resilient Infrastructure and Communities (BRIC) Grant for 504 W Ash Ave, as follows:

RESOLUTION #R2025-09
APPOINTMENT OF APPLICANT AGENT
For the Hazard Mitigation Assistance (HMA) Building Resilient Infrastructure and Communities (BRIC) Grant

WHEREAS, the City of Mitchell is submitting a Hazard Mitigation Assistance (HMA) Building Resilient Infrastructure and Communities (BRIC) Grant to the Federal Emergency Management Agency and the State of South Dakota for the 504 W Ash Ave Property Acquisition Project; and

WHEREAS, the City of Mitchell is required to appoint and Applicant Agent for the purpose of signing documents and assuring the completion of all application documents;

NOW THEREFORE BE IT RESOLVED that the City of Mitchell appoints Jordan Hanson, Mayor of the City of Mitchell, as the authorized Applicant Agent for this project.

Motion carried and resolution declared duly adopted.

Moved by McCardle, seconded by Goldammer, to approve Resolution #R2025-10, Appointing Applicant Agent for Hazard Mitigation Assistance (HMA) Building Resilient Infrastructure and Communities (BRIC) Grant for 512 & 514 W Ash Ave, as follows:

RESOLUTION #R2025-10
APPOINTMENT OF APPLICANT AGENT
For the Hazard Mitigation Assistance (HMA) Building Resilient Infrastructure and Communities (BRIC) Grant

WHEREAS, the City of Mitchell is submitting a Hazard Mitigation Assistance (HMA) Building Resilient Infrastructure and Communities (BRIC) Grant to the Federal Emergency Management Agency and the State of South Dakota for the 512 & 514 W Ash Ave Property Acquisition Project; and

WHEREAS, the City of Mitchell is required to appoint and Applicant Agent for the purpose of signing documents and assuring the completion of all application documents;

NOW THEREFORE BE IT RESOLVED that the City of Mitchell appoints Jordan Hanson, Mayor of the City of Mitchell, as the authorized Applicant Agent for this project.

Motion carried and resolution declared duly adopted.

Moved by Goldammer, seconded by Barington, to approve Resolution #R2025-08, Plat of Lot 2 of Utility Addition, as follows:

RESOLUTION #R2025-08

WHEREAS, it appears that the City Planning Commission of the City of Mitchell, South Dakota, did duly consider and did recommend the approval and adoption of the hereinafter described plat, at its meeting held on the 27th day of January, 2025; and

WHEREAS, it appears from an examination of the PLAT OF LOT 2 OF UTILITY ADDITION IN THE SW 1/4 OF SECTION 26, T 103 N, R 60 W OF THE 5TH P.M., CITY OF MITCHELL, DAVISON COUNTY, SOUTH DAKOTA, as prepared by Jeremy A. Wolbrink, a duly licensed Land Surveyor in and for the State of South Dakota, that said is in accordance with the system of streets and alleys set forth in the master plan adopted by the City Planning Commission of the City of Mitchell, South Dakota, and that such plat has been prepared according to law;

THEREFORE, be it resolved by the City Council of Mitchell, South Dakota that the PLAT OF LOT 2 OF UTILITY ADDITION IN THE SW 1/4 OF SECTION 26, T 103 N, R 60 W OF THE 5TH P.M., CITY OF MITCHELL, DAVISON COUNTY, SOUTH DAKOTA, as prepared by Jeremy A. Wolbrink, be and the same is approved and the description set forth therein and the accompanying surveyor's certificate shall prevail.

Motion carried and resolution declared duly adopted.

EXECUTIVE SESSION:

Moved by Goldammer, seconded by McCardle, to go into Executive Session as permitted by SDCL 1-25-2(3) Legal. Motion carried.

Mayor Hanson declared the board out of executive session at 8:29 p.m. and the City Council to reconvene in regular session at 8:30 p.m.

ADJOURN:

There being no further business to come before the meeting, Mayor Hanson adjourned the meeting.

Michelle Bathke

Michelle Bathke
Finance Officer

Published once at the approximate cost of _____.

Planning Commission 1-27-25
City Council Chambers, City Hall, 612 N. Main Street
January 27, 2025

1. Call to Order
Chairperson Genzlinger called the January 27, 2025 City Planning Commission Meeting to order at 12:00 P.M. noon in the Council Chambers, City Hall, 612 N Main Street.

2. Roll Call
Quorum is met, simple majority vote required for all items.
Present: Doescher, Genzlinger, Havlik, Osterloo, Schmitz (12:01), Schreurs, Sonne.
Absent: Jirsa
Staff Present: Hegg, Jenniges, J Johnson, Schroeder.

3. Declaration Of Conflicts Of Interests
Genzlinger item #7.

4. Approve Agenda
Motion by Havlik, seconded by Sonne to approve the proposed agenda. All present voting aye; motion carried.

Schmitz joined the meeting.

5. Approval of Previous Minutes: January 13, 2025
Motion by Schmitz, seconded by Osterloo to approve the proposed minutes of the January 13, 2025 Planning Commission Meeting. All present voting aye; motion carried.

6. Schedule Next Meeting: February 10, 2025
Motion by Osterloo, seconded by Sonne to set the date for the next Planning Commission Meeting for February 10, 2025. All present voting aye; motion carried.

7. Plat: Mitchell Technical Center
Plat of Lot 2 of Utility Addition in the SW 1/4 of Section 26, T 103 N, R 60 W of the 5th P.M., City of Mitchell, Davison County, South Dakota.

Jenniges gave the GIS overview of the area. There is a 30' ingress/egress access easement. They are platting a portion of their land off for financing a the new underground power lineman building. The applicant was not present to answer questions.

Motion by Schmitz, seconded by Havlik to approve the plat. All present voting aye, 1 abstain;

motion carried.

8. Other Business:
Jenniges asked for volunteers to be on a committee to look at amending the zoning ordinance to bring back to the board and council. Schreurs, Sonne and Schmitz volunteered.

9. Public Input:
None.

10. Adjourn
Chairperson Genzlinger adjourned the meeting at 12:05 P.M.

_____
Kevin Genzlinger
Planning Commission Chairperson

Planning Commission 2-10-25
City Council Chambers, City Hall, 612 N. Main Street
February 10, 2025

1. Call to Order
Chairperson Genzlinger called the Febuary 10, 2025 City Planning Commission Meeting to order at 12:00 P.M. noon in the Council Chambers, City Hall, 612 N Main Street.

2. Roll Call
Quorum is met, simple majority vote required for all items.
Present: Doescher, Genzlinger, Havlik, Osterloo, Schmitz, Schreurs, Sonne.
Absent: Jirsa
Staff Present: Boehmer, Dammann, Jenniges, Schroeder.

3. Declaration Of Conflicts Of Interests
None.

4. Approve Agenda
Motion by Sonne, seconded by Osterloo to approve the proposed agenda. All present voting aye; motion carried.

5. Approval of Previous Minutes: January 27, 2025
Motion by Havlik, seconded by Schmitz to approve the proposed minutes of the January 27, 2025 Planning Commission Meeting. All present voting aye; motion carried.

6. Schedule Next Meeting: February 24, 2025
Motion by Sonne, seconded by Osterloo to set the date for the next Planning Commission Meeting for February 24, 2025. All present voting aye; motion carried.

7. Plat: CJM Consulting Inc
Plat of Lots 2B, 2C and 2D, a subdivision of Lot 2, Block 4 of Westwood First Addition, a subdivision of the NW 1/4 of Section 16, T 103 N, R 60 W of the 5th P.M., portions of which lie within the City of Mitchell, Davison County, South Dakota.

Jenniges showed an overall GIS of the area. He noted that the land is in the county but it is the city's zoning jurisdiction. There is an easement for ingress/egress on the plat. SD DOT has seen the plat and will not approve any access from the bi-pass, that is why there is the easement. Jenniges said this the area is where the county approved a liquor license for a new steakhouse. This plat is one of many steps in the process. Commerce St will be extended during one of the next steps in the process. Don Petersen, of Morgan Theeler, was there

representing the applicant to answer any questions.

Motion by Schmitz, seconded by Havlik to approve the plat. All present voting aye; motion carried.

8. Other Business:
None.

9. Public Input:
None.

10. Adjourn
Chairperson Genzlinger adjourned the meeting at 12:04 P.M.

_____
Kevin Genzlinger
Planning Commission Chairperson

Public Library Board of Trustees Minutes

Mitchell Public Library, 221 N. Duff Street
November 19, 2024

1. **Call to Order**
   Board President Nath called the meeting to order at 5:15 p.m.

2. **Roll Call**
   The following member was present in person: Dennis Nath, Deb Everson, Diana Goldammer, and Ann Temple. Board member Emma DeVos attended via Zoom. Board member Susan Tjarks was excused. Also present was Kevin Kenkel, Library Director and Max Velasquez, Adult and Young Adult Services Librarian.

3. **Approval of Agenda**
   There were no changes to the agenda. Motion by Temple, seconded by Everson, to approve the agenda. All members present voted "Aye". Motion passed.

4. **Approval of Minutes**
   Board members reviewed the minutes from the September 19, 2024 board meeting. Motion by Goldammer, seconded by Everson, to approve these minutes. All members present voted "Aye". Motion passed.

5. **Director's Report**
   Board members reviewed written reports and monthly statistics for September and October 2024. Kenkel introduced Velasquez to board members. Kenkel and Velasquez provided additional comments regarding the written reports. Motion by Everson, seconded by Temple, to approve the director's report. All members present voted "Aye". Motion passed.

6. **Financial Report & Approval of Bills**
   Board members reviewed the September 2024 bank statements and September and October 2024 financial reports. Motion by Temple, seconded by Everson, to approve the financial reports. All members present voted "Aye". Motion passed.

7. **Business Items**
   A. **Action to Approve Policy Updates**
      Kenkel presented proposed changes to the library's Collection Development Policy that he drafted to meet the requirements of HB 1197 Section 2(2). This law requires public libraries in South Dakota to "Develop and implement, by January 1, 2025, a local policy

that establishes measures to restrict minors from accessing obscene matter or materials". These policy updates were initially reviewed by board members at the September 2024 meeting. Kenkel reminded Board members that he asked City Attorney Justin Johnson to review the proposed updates, and that Johnson approved the language. Motion by Goldammer, seconded by Temple, to approve the updated Collection Development Policy. All members present voted "Aye". Motion passed.

B. Action to Approve Funding Requests for November 2024

Kenkel presented two funding requests totaling $900.00. The first funding request was for a $300 honorarium for Lyle Miller, Sr. for his Native American art presentation November 23. The second request was for $600 to purchase supplies for a family ornament makerspace program in December. Motion by Goldammer, seconded by Everson, to approve these funding requests. All members present voted "Aye". Motion passed.

8. Committee Reports

Kenkel reported on the Strategic Planning Committee's two meetings in October. He also reported on the goals and action items that the committee identified for the strategic plan.

9. Board Input

No Board input was given.

10. Citizen's Input

No citizen's input was given.

11. Adjournment

Due to the Martin Luther King Jr. holiday the third week in January 2025, the next Board of Trustees meeting is scheduled for January 28, 2024 at 5:15 p.m. in City Council Chambers at City Hall.

There being no further business, Nath declared the meeting adjourned at 6:02 p.m.

CITY OF MITCHELL

1ST & 2ND PENNY SALES TAX
MONTHLY COLLECTION HISTORY

YEAR	BUDGET AMOUNT:	TOTAL ACTUAL COLLECTIONS:	ACTUAL % INCREASE:	JAN	FEB	MARCH	APRIL	MAY	JUNE	JULY	AUG	SEPT	OCT	NOV	DEC	
2011+	4,750,000	4,916,440.28	3.66	250,103.91	365,260.54	382,726.95	412,828.04	393,665.81	369,634.88	432,490.26	545,861.28	329,552.31	385,888.30	469,123.49	579,304.51	
2012	4,975,000	5,368,608.63	9.20	346,788.91	449,455.86	346,919.80	430,304.87	380,434.30	407,381.77	437,148.87	539,313.62	441,628.13	439,166.07	577,488.90	572,577.53	
2013	5,228,000	5,213,186.08	(2.89)	284,189.92	465,006.00	387,230.64	362,587.02	351,657.77	476,842.89	352,938.41	534,399.25	512,032.79	374,128.92	529,966.32	582,206.15	
2014	5,375,000	5,408,745.24	3.75	288,281.34	488,723.56	355,134.60	426,999.34	431,734.62	318,581.73	617,399.39	425,433.42	461,037.24	495,377.71	536,821.64	563,220.65	
2015	5,375,000	5,560,346.84	2.80	339,858.56	484,146.43	422,302.23	381,710.90	460,723.61	268,597.26	646,185.82	427,106.91	469,656.13	515,639.93	439,824.99	704,594.07	
2016	5,590,000	5,471,800.14	(1.59)	262,045.44	454,696.09	404,757.42	457,175.98	427,186.92	304,652.26	636,229.69	495,486.87	509,235.58	491,896.66	386,211.17	642,226.06	
2017	5,590,000	5,472,944.38	0.02	314,226.16	439,907.44	414,473.29	428,428.32	360,943.07	383,528.56	703,067.14	450,666.82	565,721.51	395,455.72	467,453.85	549,072.50	
2018	5,471,800	5,724,840.89	4.60	383,276.70	505,707.15	447,184.03	402,686.59	443,340.74	283,989.97	720,544.06	546,190.43	527,070.30	378,035.60	429,741.17	657,074.15	
2019	5,521,800	5,645,323.19	(1.39)	380,964.38	475,050.96	439,829.32	286,501.27	595,560.40	226,352.24	617,301.74	648,368.69	463,520.66	487,890.04	535,978.36	488,005.13	
2020	5,378,333	5,615,768.74	(0.52)	482,425.98	401,397.66	398,890.87	476,968.75	422,410.65	154,761.72	820,662.75	494,907.24	464,629.72	520,474.40	441,945.44	536,293.56	
2021	5,593,333	6,187,725.34	10.18	504,793.07	370,090.20	389,887.56	596,963.70	510,380.97	148,174.57	935,626.32	509,241.13	581,897.23	540,337.38	461,781.44	638,551.77	
2022	5,715,769	6,775,812.09	9.50	583,303.14	371,021.69	530,565.79	581,055.46	484,781.15	556,110.56	656,824.67	536,419.86	653,776.19	614,839.88	529,332.04	677,781.66	
2023	5,900,000	7,250,061.70	7.00	540,211.39	535,030.61	518,010.54	587,336.88	552,642.54	569,536.97	740,477.38	532,185.96	721,465.80	595,898.42	622,051.08	735,214.13	
2024	6,526,817	7,658,645.68	5.64	523,359.33	671,681.61	560,936.87	521,925.50	716,780.80	287,271.97	875,526.51	801,243.12	615,917.54	672,847.10	735,394.79	675,760.54	Monthly
				523,359.33	1,195,040.94	1,755,977.81	2,277,903.31	2,994,684.11	3,281,956.08	4,157,482.59	4,958,725.71	5,574,643.25	6,247,490.35	6,982,885.14	7,658,645.68	YTD
						649,870.29			0.00			0.00			0.00	Quarter
2025	6,716,495	649,870.29	24.17	649,870.29												Monthly
				649,870.29	649,870.29	649,870.29	649,870.29	649,870.29	649,870.29	649,870.29	649,870.29	649,870.29	649,870.29	649,870.29	649,870.29	YTD
				24.17%												YTD %

\+ Adjusted for Sales Tax Repayment to the City of Mitchell from the Dept. of Revenue in the amount of $179,411.96 ($89,705.98 per penny).

CITY OF MITCHELL

3RD PENNY SALES TAX

MONTHLY COLLECTION HISTORY

YEAR	BUDGET AMOUNT:	TOTAL ACTUAL COLLECTIONS:	ACTUAL % INCREASE:	JAN	FEB	MARCH	APRIL	MAY	JUNE	JULY	AUG	SEPT	OCT	NOV	DEC	
2011	633,000	656,532.15	(1.21)	26,671.51	39,718.12	52,305.37	38,082.17	55,190.54	43,028.14	60,191.20	88,869.14	59,330.81	63,627.23	61,965.11	67,552.81	
2012	685,000	697,676.11	6.27	35,495.28	50,249.85	40,223.92	53,342.71	41,471.21	53,061.04	66,511.13	70,424.58	66,513.28	78,163.66	70,292.30	71,927.15	
2013	698,000	691,101.94	(0.94)	39,093.16	45,866.76	46,995.83	46,613.05	43,611.55	54,752.71	59,752.01	73,658.78	87,800.75	58,844.21	66,328.60	67,784.53	
2014	722,000	725,646.21	5.00	40,589.02	55,025.37	39,932.15	52,364.46	50,247.07	39,537.64	84,347.73	60,746.51	80,425.22	79,444.10	76,788.99	66,197.95	
2015	722,000	770,673.56	6.21	40,576.25	59,215.80	54,719.15	45,861.63	61,744.01	38,705.69	88,722.32	81,104.74	84,132.85	72,490.69	70,456.90	72,943.53	
2016	750,000	793,240.17	2.93	41,867.71	51,009.46	52,674.42	63,143.71	49,546.19	44,965.73	86,758.93	77,118.75	86,148.78	89,887.83	68,789.53	81,329.13	
2017	680,000	790,107.66	(0.39)	40,489.65	56,521.74	50,677.06	61,899.68	49,494.55	58,254.78	101,128.39	68,449.71	99,641.56	64,528.02	65,496.74	73,525.78	
2018	820,000	789,559.57	(0.07)	41,017.18	62,200.06	60,841.78	50,561.37	49,355.07	43,471.88	107,048.99	85,942.83	85,336.14	55,490.48	63,417.12	84,876.67	
2019	790,000	833,576.12	5.57	51,576.74	62,859.78	59,877.64	39,434.95	78,468.82	37,515.98	89,755.78	102,353.23	88,685.77	76,541.45	80,242.70	66,263.28	
2020	790,000	755,428.66	(9.37)	59,397.75	56,494.36	56,549.98	60,882.27	40,520.39	22,918.06	96,077.01	74,822.08	75,068.34	83,093.78	57,532.07	72,072.57	
2021	650,000	929,153.77	23.00	55,833.11	50,072.02	52,153.92	82,977.05	65,403.88	31,383.95	141,572.27	88,289.63	115,642.67	86,501.58	70,472.20	88,851.49	
2022	755,000	974,002.42	4.83	69,159.45	43,370.47	71,726.38	88,038.67	65,622.79	79,575.08	101,833.57	86,884.13	111,617.49	86,439.65	81,092.65	88,642.09	
2023	845,000	974,198.96	0.02	58,654.19	75,561.41	64,984.79	70,927.22	60,049.02	79,488.38	103,248.21	77,102.98	125,332.71	81,233.49	85,474.21	92,142.35	
2024	929,195	1,034,854.90	6.23	61,771.89	83,007.31	62,861.51	56,488.20	92,082.15	46,335.69	119,713.09	118,739.00	99,474.20	100,572.32	108,687.09	85,122.45	Monthly
				61,771.89	144,779.20	207,640.71	264,128.91	356,211.06	402,546.75	522,259.84	640,998.84	740,473.04	841,045.36	949,732.45	1,034,854.90	YTD
						75,709.81			0.00			0.00			0.00	Quarter
2025	975,000	75,709.81	22.56	75,709.81												Monthly
				75,709.81	75,709.81	75,709.81	75,709.81	75,709.81	75,709.81	75,709.81	75,709.81	75,709.81	75,709.81	75,709.81	75,709.81	YTD
				22.56%												YTD %

Date: Jan. 10, 2025
To: Mayor & City Council
Re: January 2025 Building Permits

	Permit #	Name	Address	Building	Contractor	Cost	Fee	Category
1	15362	Todd Boyd	155 S. Harmon Dr.	Demo House	Mitch Morgan	$ 15,000.00	$ 20.00	Demolitions
2	15363	Moody Properties	1157 Woods Cr.	New Home	Moody Properties	$ 169,100.00	$ 606.00	New Residential
3	15364	Golden Praire Apts	2403 S. Capital St.	New 24 unit Apt.	Lloyd Co.	$ 2,826,500.00	$ 9,020.00	New Residential
4	15365	Bldrs 1st. Source	1517 Torrey Pines Ave	New Home	Bldrs. 1st Source	$ 228,005.00	$ 753.00	New Residential
5	15366	Flats on Havens	1525 W. Havens	Parking Garage rework Spc.	Stencil Grp.	$ 70,000.00	$ 509.00	Commercial Additions
6	15367	Kim Van Walleghen	114 E. 9th Ave.	Egress window	Owner	$ 1,500.00	$ 20.00	Re-roof/shingle
7	15368	Tailored To You	1109 N. Main St.	Rework office space	Radke Const.	$ 60,000.00	$ 460.00	Commercial Additions
8	15369	Allison Russell	513 E. 16th Ave.	Reside Home	Paul Scott	10,600	20	Re-roof/shingle
9								
10								
11								
12								
13								
14								
15								
16								
17								
18								
19								
20								
21								
22								
23								
24								
25								
26								
27								
28								
29								
30								
31								
32								
					Total	**$ 3,380,705.00**	**$ 11,408.00**	

Sincerely,
John D. Hegg

Building Official

		Category Totals $		Category Total #		Permit Fee
New Residential	$	3,223,605.00		3	$	10,379.00
City Building	$	-		0	$	-
Duplexes	$	-		0	$	-
4 Plex	$	-		0	$	-
6 Plex	$	-		0	$	-
7 plex	$	-		0	$	-
10 Plex	$	-		0	$	-
Tower	$	-		0	$	-
New Commercial	$	-		0	$	-
Residential Additions	$	-		0	$	-
Garages/Sheds	$	-		0	$	-
Commercial Additions	$	130,000.00		2	$	969.00
Re-roof/shingle	$	12,100.00		2	$	40.00
Demolitions	$	15,000.00		1	$	20.00
Total	$	3,380,705.00	$	8	$	11,408.00

MITCHELL POLICE DEPARTMENT
ACTIVITY REPORT FOR JANUARY 2025

	JAN 2024	JAN 2025	YEAR TO DATE 2025
CALLS			
Calls for Service (6 Counties)	828	**645**	645
Calls for Service (City of Mitchell)	734	**739**	739
Case Reports Written (City Mitchell)	186	**162**	162
TOTAL CALLS ANSWERED	1748	**1546**	1,546

TRAFFIC STOPS PERFORMED			
Mitchell Police	172	**319**	319
All other counties	350	**872**	872
TOTAL TRAFFIC STOPS	522	**1191**	1191

ACCIDENTS			
TOTAL ACCIDENTS REPORTED	40	**21**	21

TICKETS ISSUED	111	**124**	124

WARNING TICKETS ISSUED	143	**256**	256

PARKING TICKETS ISSUED	156	**12**	12

Dean Knippling
Chief of Police

Mitchell Fire Rescue Monthly reports for 2025

Amb Call Activity	Jan	Feb	Mar	Apr	May	Jun	July	Aug	Sept	Oct	Nov	Dec	Total
Total amb calls	171												171
Amb. Transfers Out of Town	9												9
													180
Fire Call Activity	**Jan**	**Feb**	**Mar**	**Apr**	**May**	**Jun**	**July**	**Aug**	**Sept**	**Oct**	**Nov**	**Dec**	**Total**
Total fire calls	19												19
City fire calls	16												16
County fire calls	3												3
EMS assist calls	53												53
Total Responses													91
Fire Preven. Activity	**Jan**	**Feb**	**Mar**	**Apr**	**May**	**Jun**	**July**	**Aug**	**Sept**	**Oct**	**Nov**	**Dec**	**Total**
Fire Inspections	0												0
Consultations/Plans	13												13
Public Education	3												3
Fire Investigations	0												0
Total Activity													16
Dept. Other Activity	**Jan**	**Feb**	**Mar**	**Apr**	**May**	**Jun**	**July**	**Aug**	**Sept**	**Oct**	**Nov**	**Dec**	**Total**
Total Activities	22												22
Dept. tours	8												8
Public Education	3												3
Total Activity													33
Total CFS/Activity													**Total**
													311

CITY OF MITCHELL

MONTHLY WATER TREATMENT CHEMICAL COMSUMPTION REPORT

MONTH / YEAR—January, 2025----- Jon Vermeulen – Utilities Superintendent

Coagulant Aid- (2187) = 0-Gals. X CONTRACT = $0.00

Lime = 0# or 0- TON'S X $192.39/TON = $0.00

Sodium Chlorite = 0-GAL. X CONTRACT = $0.00

Fluoride = 0-GAL. X $1.99/GAL. = $0.00

Polymer (2386) = 0-GAL. X CONTRACT = $0.00

Activated Carbon = 0# or 0- TON'S X $1,936.25/TON = $0.00

Chlorine = 0# or 0.0- TON'S X $1.45/LB. = $0.00

Poly Phosphate = 400# or .20 TON X $2.25/LB. = $900.00

Carbon Dioxide = 0# or 0 - TON'S X $178.00/TON = $0.00

Ammonia = 0# or 0.0- TON'S X $2.17 /LB. = $0.00

Pristine Contract = 0 –MG of WATER X .255/1000 GALS. RAW WATER = $0.00

TOTAL = $900.00

Raw Water Treated (LAKE) 0 MG------or 0 MGD----------or---------- PEAK DAY 0 MG

Finished Water (EFFLUENT) 44.483 MG-----or 1.435 MGD----------or-------- PEAK DAY 1.729 MG

B-Y- Water (INFLUENT) 43.466 MG------ or 1.402 MGD--------or---------- PEAK DAY 1.781 MG

B-Y & RAW WATER TREATED – TOTAL= 43.466 MG --- or 1.402 MGD ----or ----- PEAK DAY 1.781 MG

Chemical cost = 900.00 = $20.23 per MG or 0.016 cents per Unit (750 GALLONS).

CHEMICAL FEED RATES IN Mg/L

Coagulant Aid- (2187) = 0 Mg/L -- 0 Gallons / Raw Water

Lime = 0 Mg/L 0 lbs. / 7 lbs. Per Gallon/ Raw Water

Sodium Chlorite = 0 Mg/L -- 0 Gallons / Raw Water

Fluoride = 0 Mg/L -- 0 Gallons / Raw Water

Polymer (2386) = 0 Mg/L -- 0 Gallons / Raw Water

Activated Carbon = 0 Mg/L -- 0 lbs. / 4 lbs. per Gallon / Raw Water

Chlorine = 0 Mg/L -- 0 lbs. / 11.75 lbs. per Gallon / Raw Water

Poly Phosphate = 1.50 Mg/L-- 400 lbs. / 10.5 lbs. per Gallon / Raw Water

Carbon Dioxide = 0 Mg/L -- 0 lbs. / 8.50 lbs. per Gallon / Raw Water

Ammonia = 0 Mg/L -- 0 lbs. / 5.15 lbs. per Gallon / Raw Water

Polymer = 0 Mg/L -- 0

CITY OF MITCHELL

Monthly - Chemical Inventory at the Water Treatment Plant

Date: 2/1/25

Coagulant – (AF-1102) ____0____Gallons

Lime __159,104__lbs. or __79.552__Ton's

Fluoride ____814____ Gallon's

Sodium Chlorite – (PHI-3125) ___80___ Gallon's

`

Polymer-(PHI-2386) ____0____Gallon's
(AF-84500)____0____Gallon's

Activated Carbon ___6,650___lbs. or ____3.325____Ton's

Chlorine ____581____lbs. or ____0.290____Ton

Poly-phosphate __50___lbs. or __.025____Ton's

Carbon Dioxide ___0___Lbs. or ___0___Ton's

Ammonia ____472.5____ lbs. or ____0.236____Ton's

MONTHLY -- B-Y WATER-GALLON AND CHEMICAL USAGE REPORT

MONTH --- January YEAR - 2025

Influent -------- 44.483-- Million Gallon's

Effluent ------- 43.466 -- Million Gallon's

Chemical costs for B-Y Water:

Chlorine usage --------- 0 lbs. @ $1.45 per lb. = $0.00

Ammonia usage ------- 0 lbs. @ $2.17 per lb. = $0.00

Poly –phosphate------ 400 lbs. @ $2.25 per lb. = $900.00

Total = $900.00

Cost per Unit (750 gallon) = $0.016

Cost per 1,000 gallons of water = $0.021

2022 - WATER CONSUMPTION

DATE	Lake Mitchell Influent MG	B-Y Rural Water Influent MG	Effluent to Water Towers MG
1/1/2025	0-MG	1.042	0.940
1/2/2025	0-MG	1.578	1.781
1/3/2025	0-MG	1.149	1.017
1/4/2025	0-MG	1.614	1.737
1/5/2025	0-MG	1.152	0.998
1/6/2025	0-MG	1.673	1.746
1/7/2025	0-MG	1.108	0.927
1/8/2025	0-MG	1.648	1.726
1/9/2025	0-MG	1.127	0.924
1/10/2025	0-MG	1.729	1.759
1/11/2025	0-MG	1.075	0.941
1/12/2025	0-MG	1.671	1.773
1/13/2025	0-MG	1.467	1.437
1/14/2025	0-MG	1.039	0.865
1/15/2025	0-MG	1.601	1.531
1/16/2025	0-MG	1.624	1.604
1/17/2025	0-MG	1.393	1.300
1/18/2025	0-MG	1.567	1.538
1/19/2025	0-MG	1.266	1.206
1/20/2025	0-MG	1.274	1.205
1/21/2025	0-MG	1.682	1.647
1/22/2025	0-MG	1.332	1.284
1/23/2025	0-MG	1.735	1.725
1/24/2025	0-MG	1.345	1.309
1/25/2025	0-MG	1.460	1.491
1/26/2025	0-MG	1.590	1.518
1/27/2025	0-MG	1.346	1.305
1/28/2025	0-MG	1.545	1.518
1/29/2025	0-MG	1.589	1.524
1/30/2025	0-MG	1.418	1.414
1/31/2025	0-MG	1.644	1.776
TOTALS	0-MG	44.483	43.466

Utilities Superintendent-Jon Vermeulen

Date	Source	Site	Chlorine PPM 0.5PPM-4.00PPM	Bacteria
1/7/2025	Fire Dept	#2	2.70	Absent
1/7/2025	J Mart Sinclair	#5	2.77	Absent
1/7/2025	Arnies	#8	2.83	Absent
1/7/2025	Welsey Acres	#9	2.81	Absent
1/7/2025	Culvers	#10	2.67	Absent
1/7/2025	Mitchell Tech Inst	#16	2.82	Absent
1/7/2025	Brady Memorial Home	#19	2.79	Absent
1/7/2025	Mitchell Middle School	#18	2.86	Absent
1/13/2025	Water Treatment Plant	#1	2.82	Absent
1/13/2025	Queen Of Peace	#3	2.72	Absent
1/13/2025	East Cuby's Store	#4	2.72	Absent
1/13/2025	Dakota Medical Specialis	#6	2.66	Absent
1/13/2025	Erickson Oil	#7	2.80	Absent
1/13/2025	Holy Family Church	#17	2.70	Absent
1/13/2025	Abbra Body Shop	#20	2.52	Absent
Average			**2.75**	**Absent**

B-Y WATER DISTRICT

31039 428th AVENUE PO BOX 248
TABOR SD 57063

JV

Phone (605) 463-2531 Toll Free (800) 286-3654
E-mail msmudder@hcinet.net or srwoods@hcinet.net

Office Hours:
Monday-Friday 8:00 A.M. to 4:30 P.M.

CITY OF MITCHELL
612 N. MAIN STREET
MITCHELL SD 57301

B-Y WATER
602-43330-42850

Service Address

Acct # 06771

Date Printed FEB 4 25

Monthly Billing Statement

Date Read	Present Reading	Previous Reading	Total Gallons Used	Water Charge	Non Water Charge	Amount
FEB 1 25	23,951,000	0	23,951,000	31,854.83		31,854.83
						0.00

Balance Due Upon Receipt $ 31,854.83

If not paid by the 20th of the month, we will apply a $25.00 late fee to your bill.

B-Y Water District is an Equal Opportunity Employer and Provider
PLEASE RETURN BOTTOM PORTION WITH YOUR PAYMENT

CITY OF MITCHELL
612 N. MAIN STREET
MITCHELL SD 57301

06771

FEB 4 25

CUST ACCT # 06771

Date Read	Present Reading	Previous Reading	Total Gallons Used	Water Charge	Non Water Charge	Amount
FEB 1 25	23,951,000	0	23,951,000	31,854.83		31,854.83
						0.00

Service Address

Balance Due Upon Receipt $ 31,854.83

Remit to:

B-Y WATER DISTRICT
P O BOX 248
TABOR SD 57063

TOTAL PAYMENT $ _____.__

B-Y WATER DISTRICT

31039 428th AVENUE PO BOX 248
TABOR SD 57063

Phone (605) 463-2531 Toll Free (800) 286-3654
E-mail msmudder@hcinet.net or srwoods@hcinet.net

Office Hours:
Monday-Friday 8:00 A.M. to 4:30 P.M.

CITY OF MITCHELL
612 N. MAIN STREET
MITCHELL SD 57301

Service Address

Acct # 06771 **Date Printed** FEB 4 25

Monthly Billing Statement

Date Read	Present Reading	Previous Reading	Total Gallons Used	Water Charge	Non Water Charge	Amount
FEB 1 25	23,951,000	23,951,000	0	27,798.33		27,798.33
						0.00

20,901,000 GALLONS ON OLD METER
METER CHANGED OUT 1/16/2025

Balance Due Upon Receipt $ 27,798.33

If not paid by the 20th of the month, we will apply a $25.00 late fee to your bill.

B-Y Water District is an Equal Opportunity Employer and Provider
PLEASE RETURN BOTTOM PORTION WITH YOUR PAYMENT

CITY OF MITCHELL
612 N. MAIN STREET
MITCHELL SD 57301

06771

FEB 4 25

CUST ACCT # **06771**

Date Read	Present Reading	Previous Reading	Total Gallons Used	Water Charge	Non Water Charge	Amount
FEB 1 25	23,951,000	23,951,000	0	27,798.33		27,798.33
20,901,000 GALLONS ON OLD METER METER CHANGED OUT 1/16/2025						0.00

Service Address

Balance Due Upon Receipt $ 27,798.33

Remit to:

B-Y WATER DISTRICT
P O BOX 248
TABOR SD 57063

TOTAL PAYMENT $ _____.__

City of Mitchell Water Rate Charged

2/3/2025

	Base Rate (1,000 Gallons)	Added Rate (1,000 Gallons)	Combined Rate (1,000 Gallons)
Use below 2.65 MGD =	$1.33	$0.00	$1.33
Use between 2.65 MGD to 2.90 MGD =	$1.33	$1.00	$2.33
Use between 2.90 MGD to 3.15 MGD =	$1.33	$1.50	$2.83
All use over 3.15 MGD =	$1.33	$2.00	$3.33

Month: 1 **Year:** 2025 **Billing Month:** 2

Day of Month	24 Hour Use(Kgal)	Use Above 2.65 MGD	Base Rate Use	Base Rate Cost	2.65 - 2.9 MGD Usage	2.65 - 2.9 MGD Added Cost	2.9 - 3.15 MGD Usage	2.9 - 3.15 MGD Added Cost	All Use Over 3.15 MGD	All Use Over 3.15 MGD Cost	Total Daily Cost
1	1,334,000	0	1,334,000	$1,774.22	0	$0.00	0	$0.00	0	$0.00	$1,774.22
2	1,265,000	0	1,265,000	$1,682.45	0	$0.00	0	$0.00	0	$0.00	$1,682.45
3	1,450,000	0	1,450,000	$1,928.50	0	$0.00	0	$0.00	0	$0.00	$1,928.50
4	1,401,000	0	1,401,000	$1,863.33	0	$0.00	0	$0.00	0	$0.00	$1,863.33
5	1,355,000	0	1,355,000	$1,802.15	0	$0.00	0	$0.00	0	$0.00	$1,802.15
6	1,399,000	0	1,399,000	$1,860.67	0	$0.00	0	$0.00	0	$0.00	$1,860.67
7	1,377,000	0	1,377,000	$1,831.41	0	$0.00	0	$0.00	0	$0.00	$1,831.41
8	1,371,000	0	1,371,000	$1,823.43	0	$0.00	0	$0.00	0	$0.00	$1,823.43
9	1,407,000	0	1,407,000	$1,871.31	0	$0.00	0	$0.00	0	$0.00	$1,871.31
10	1,736,000	0	1,736,000	$2,308.88	0	$0.00	0	$0.00	0	$0.00	$2,308.88
11	1,051,000	0	1,051,000	$1,397.83	0	$0.00	0	$0.00	0	$0.00	$1,397.83
12	1,665,000	0	1,665,000	$2,214.45	0	$0.00	0	$0.00	0	$0.00	$2,214.45
13	1,381,000	0	1,381,000	$1,836.73	0	$0.00	0	$0.00	0	$0.00	$1,836.73
14	1,102,000	0	1,102,000	$1,465.66	0	$0.00	0	$0.00	0	$0.00	$1,465.66
15	1,607,000	0	1,607,000	$2,137.31	0	$0.00	0	$0.00	0	$0.00	$2,137.31
16	1,797,000	0	1,797,000	$2,390.01	0	$0.00	0	$0.00	0	$0.00	$2,390.01
17	1,797,000	0	1,797,000	$2,390.01	0	$0.00	0	$0.00	0	$0.00	$2,390.01
18	1,361,000	0	1,361,000	$1,810.13	0	$0.00	0	$0.00	0	$0.00	$1,810.13
19	1,171,000	0	1,171,000	$1,557.43	0	$0.00	0	$0.00	0	$0.00	$1,557.43
20	1,170,000	0	1,170,000	$1,556.10	0	$0.00	0	$0.00	0	$0.00	$1,556.10
21	1,586,000	0	1,586,000	$2,109.38	0	$0.00	0	$0.00	0	$0.00	$2,109.38
22	1,716,000	0	1,716,000	$2,282.28	0	$0.00	0	$0.00	0	$0.00	$2,282.28
23	1,325,000	0	1,325,000	$1,762.25	0	$0.00	0	$0.00	0	$0.00	$1,762.25
24	1,653,000	0	1,653,000	$2,198.49	0	$0.00	0	$0.00	0	$0.00	$2,198.49
25	1,494,000	0	1,494,000	$1,987.02	0	$0.00	0	$0.00	0	$0.00	$1,987.02
26	1,651,000	0	1,651,000	$2,195.83	0	$0.00	0	$0.00	0	$0.00	$2,195.83
27	1,008,000	0	1,008,000	$1,340.64	0	$0.00	0	$0.00	0	$0.00	$1,340.64
28	1,687,000	0	1,687,000	$2,243.71	0	$0.00	0	$0.00	0	$0.00	$2,243.71
29	1,194,000	0	1,194,000	$1,588.02	0	$0.00	0	$0.00	0	$0.00	$1,588.02
30	1,663,000	0	1,663,000	$2,211.79	0	$0.00	0	$0.00	0	$0.00	$2,211.79
31	1,678,000	0	1,678,000	$2,231.74	0	$0.00	0	$0.00	0	$0.00	$2,231.74
TOTALS	**44,852,000**	**0**	**44,852,000**	**$59,653.16**	**0**	**$0.00**	**0**	**$0.00**	**0**	**$0.00**	**$59,653.16**

Previous Month Read =	0
Current Month Read =	23,951,000
Current Month Use =	23,951,000

	Total Cost	Gallons Used	Base Cost	Cost Over 2.65MGD
Days billed in January =	$59,653.16	44,852,000	$59,653.16	$0.00
Days carried from previous month =	$0.00	0	$0.00	$0.00
Total bill for January =	$59,653.16	44,852,000	$59,653.16	$0.00

Days that will be billed in February = $0.00

Note: February billing meter was read on February 3rd therefore no January days will be included in March billing.

City of Mitchell | Dept. of Public Safety
201 West 1st Ave | Mitchell, SD 57301
Phone: 605-995-8400 | Fax: 605-995-8486
CityOfMitchell.org

January 2025 monthly Code Enforcement report:

-As of 02/10/25 Code Enforcement is currently monitoring 12 properties in the city of Mitchell.

-There were no snow removals in the month of January.

Sincerely,

Ryan Erickson | Department of Public Safety
City of Mitchell
201 W. 1st Street, Mitchell. SD 57301
605-995-8400
Ryan.Erickson@cityofmitchellsd.gov

CITY OF MITCHELL
RAFFLE PERMIT

Date of Application: 1/30/25

Organization: DAVISON COUNTY DEMOCRATS

SDCL #22-25-25 authorizes the following organizations or committees to conduct lotteries / raffles. Please indicate your category:

_____ Chartered veterans' organization
_____ Charitable organization
_____ Fraternal organization
X Political party
_____ Political action committee or political committee on behalf of any candidate for a political office
_____ Religious organization
_____ Educational organization
_____ Local civic or service club
_____ Volunteer fire department

Contact Information:

Name: DAVE MITCHELL

Address: 621 SO. DUFF ST.

Phone #: 605 999 8435

Email: DAVE.MITCHELL@DWU.EDU

501(c) 3 – (Non-Profit): yes_____ no 1 eligible_____

Dates of Ticket Sales: ~~[illegible]~~ 2/28/25

Date of Raffle Drawing: 5/26/25

Value of Raffle Prize: $100, $50, $50

Proceeds Benefitting: COUNTY PARTY ELECTION ACTIVITIES

*Raffle tickets cannot be sold until 30 days after permit is received by Finance Office

Date Received: 1/30/25

For Finance Office Use Only:

Council Approval Date: _____

Signature:

_____
Finance Officer

CITY OF MITCHELL
RAFFLE PERMIT

Date of Application: 2/3/2025

Organization: Gertie Belle Rogers Parent Teacher Association

SDCL #22-25-25 authorizes the following organizations or committees to conduct lotteries / raffles. Please indicate your category:

_____ Chartered veterans' organization
_____ Charitable organization
_____ Fraternal organization
_____ Political party
_____ Political action committee or political committee on behalf of any candidate for a political office
_____ Religious organization
_X_ Educational organization
_____ Local civic or service club
_____ Volunteer fire department

Contact Information:

Name: Kate McEntee

Address: 1513 Pinehurst Ave, Mitchell, SD 57301

Phone #: 605 999 8307

Email: kate.mcentee@k12.sd.us

501(c) 3 – (Non-Profit): yes X no_____ eligible_____

Dates of Ticket Sales: 03/12/2015 - 03/31/2025

Date of Raffle Drawing: 03/31/2025

Value of Raffle Prize: 1st - $500 2nd - $250 3rd - $100

Proceeds Benefitting: GBR PTA

*Raffle tickets cannot be sold until 30 days after permit is received by Finance Office

Date Received: 2-3-2025

For Finance Office Use Only:

Council Approval Date: _____

Signature:

_____
Finance Officer

CITY OF MITCHELL

City Council Meeting
Agenda Item Request

The deadline for agenda items is Wednesday at noon, prior to the City Council Meeting

Meeting Date Requested:	February 18, 2025	**Requested By:**	Dean Knippling
Desired Action of City Council:	Approve		
Amount Budgeted in current fiscal year for this item (if applicable):	$62,000.00		
Agenda Item:	Purchase of 2025 Dodge Durango for the Police Department		
Explanation/Background of Agenda Item Requested:	The Police Department is requesting authorization to purchase one 2025 Dodge Durango using South Dakota state bid pricing. This request is to replace one aging patrol car. State vehicle bid #27 is for a Dodge Durango pursuit rated, destroyer gray in color, contract #17620, which Iverson Auto agreed to match. The base price is $40,566, with an add-on LED post-mounted spotlight and paint, making the total cost $41,751.00. The total amount budgeted was $62,000 which included emergency lights and needed equipment.		

27. TRUCK UTILITY FULL SIZE. 4 DOOR PURSUIT RATED; ALL WHEEL DRIVE

WEGNER AUTO
DODGE DURANGO PURSUIT RATED
CONTRACT #: 17620

Engine, 5.7 Liter V-8 355 HP
Seating Capacity 5 Passengers
Cargo Volume 70 Cubic Feet
Overall Length 201"
Transmission, Automatic
Police engine cooling package
Bluetooth Capability
220 Amp Alternator
750 CCA Heavy duty battery
Interior center mounted Police dome light with red and white illumination
Backup Camera
Power Door Locks
Power Windows
Power locks
Radio, AM/FM with auxiliary audio port/usb
Air Bags, Side Impact
Rear Heat and Air Conditioning
Police wiring and interior power supply for lighting/police equipment
Cruise Control/Tilt
Floor Covering, Carpet
Guard, Skid Plate Package – Manufacturer's Standard (includes skid plates for the fuel tank, transfer case and front suspension)
Towing Capacity 5000 pounds
Heavy duty suspension, police rated (PPV)
Tires, P265/60R18, All-Season
Brakes – ABS, 4-wheel disc brakes
Trailer Tow pkg., Cooler, Engine Oil Cooler, Cooler, Transmission
Mirrors, Right & Left Outside
Power Heated Mirrors
Rear Window Defroster
Seats, Front, Bucket, Cloth
Power adjustable driver's seat
Seat Covering heavy duty cloth
Rear Seat, Cloth
Wipers, Multiple Speed
Wiper, Rear Window
Dark tinted glass
Standard Colors are Silver, Black, White, & Destroyer Gray (SILVER $395.00; GRAY $395.00)
Factory Freight

Delivery 120 150 days

Base Cost $40,566 (until 06/30/2025)

• 3.6 L Pentastar Engine	$(-1500)
• Light, Spotlight, Post Mounted 6" (black housing)	$790
• Engine block heater	$425
• Daytime Running Lights	$200
• Full Size Spare	$300
• Push Bar Sentina	$1850
• Full Center Console	$450
• Paint upgrade charge, dealer must specify which colors have an upgrade charge	$595
• Rear Vinyl Seat	$195
• Painted Aluminum Wheels	$595
• Driver's Side Ballistic Door Panel	$2,995

• Passenger Side Ballistic Door Panel	$2,995 – must order driver ballistic door
• Rear Window Switches/Rear Door Locks/Handles Inoperable	$175
• Splash Guards (4 wheels)	$350
• Police Floor Console	$1295
• Navigation Radio w/ 10.1" Display	$1195
• Vinyl Flooring	NC

523 East Capitol, Pierre, South Dakota 57501
605.773.3405 / boa.sd.gov

IFB 2468 – 2022 OR NEWER VEHICLES ANNUAL

NOTICE
ADDENDUM 24

DATE: May 30, 2024
BUYER: Scott Nelson
PHONE: 605-773-4275

Addendum 24 is being issued for the following:

Extension of contracts with Beck Motors, Boyer Ford, Iverson Automotive, Lamb Chevrolet, Lamb Motors, and Wegner Auto for another year, through September 30, 2025. Vehicles will be added as soon as the pricing becomes available.

Compliance With SDCL Ch 5-18A: Contractor certifies and agrees that the following information is correct:

The bidder or offeror is not an organization, association, corporation, partnership, joint venture, limited partnership, limited liability partnership, limited liability company, or other entity or business association, including all wholly-owned subsidiaries, majority-owned subsidiaries, parent companies, or affiliates, of those entities or business associations, regardless of their principal place of business, which is ultimately owned or controlled, directly or indirectly, by a foreign parent entity from, or the government of, the People's Republic of China, the Republic of Cuba, the Islamic Republic of Iran, the Democratic People's Republic of Korea, the Russian Federation, or the Bolivarian Republic of Venezuela.

It is understood and agreed that, if this certification is false, such false certification will constitute grounds for the purchasing agency to reject the bid or response submitted by the bidder or offeror on this project and terminate any contract awarded based on the bid or response, and further would be cause to suspend and debar a business under SDCL § 5-18D-12.

The successful bidder or offeror further agrees to provide immediate written notice to the purchasing agency if during the term of the contract it no longer complies with this certification and agrees such noncompliance may be grounds for contract termination and would be cause to suspend and debar a business under SDCL § 5-18D-12.

All terms and conditions remain the same.

Steven L. Berg, Director
Office of Procurement Management

523 East Capitol, Pierre, South Dakota 57501
605.773.3405 / boa.sd.gov

IFB 2468 – 2022 OR NEWER VEHICLES ANNUAL

NOTICE
ADDENDUM 27

DATE: July 25, 2024
BUYER: Scott Nelson
PHONE: 605-773-4275

Addendum 27 is being issued for the following:

Approve price changes and add the Dodge Durango Pursuit (Line Item 27) back on to the contract for Wegner Auto.

Steven L. Berg, Director
Office of Procurement Management

PROCUREMENT MANAGEMENT

523 East Capitol, Pierre, South Dakota 57501

605.773.3405 / boa.sd.gov

IFB 2468 – 2022 OR NEWER VEHICLES ANNUAL

NOTICE
ADDENDUM 38

DATE: January 27, 2025
BUYER: Scott Nelson
PHONE: 605-773-4275

Addendum 38 is being issued for the following:

Approval of price changes for Boyer Ford (items 11, 21AB, 21C) and Wegner Auto (item 27),

Steven L. Berg, Director
Office of Procurement Management

CITY OF MITCHELL

City Council Meeting
Agenda Item Request

The deadline for agenda items is Wednesday at noon, prior to the City Council Meeting

Meeting Date Requested:	February 18, 2025	**Requested By:**	Joe Schroeder
Desired Action of City Council:			
Amount Budgeted in current fiscal year for this item (if applicable):	101-43100-43421, Fuel System Upgrade - $22,500		
Agenda Item:	Purchase of Islander Prime Fuel Management System to Midwest Petroleum Equipment Project #2025-22		
Explanation/Background of Agenda Item Requested:	Approve PurchThe current fuel pumping software is out of date. We experience crashes every few months which does not allow us to pump gas until the issue is resolved. The current software which is from Islander is out of date and no longer supported. Staff recommends updating the Islander software to Islander Prime Fuel Management System. Staff recommends approving the purchase of Islander Prime FMS from Midwest Petroleum for a total cost of $21,102.77.ase of Islander Prime Fuel Management System to Midwest Petroleum Equipment, City Project No. #2025-22		

PROPOSAL: 14546
DATE: 01-28-2025

To:	**City of Mitchell** Kevin Roth 1405 W 8th Street Mitchell, SD57301	**Project:**	**City of Mitchell** 1405 W 8th Street Mitchell, SD, 57301	**Salesperson:** Mike Kloos Mike.kloos@mwpetroleum.com Estimator: Johnny Ping

Quantity	Name	Total
1	Islander Prime FMS	$18,296.99
	Includes- Islander Prime pedestal, controller setup fee, data loading fee, FHO software, MiFare tag readers and 180 blue MiFare tags.	
1	Installation Labor & Mobilization	$2,805.78
	SUBTOTAL:	$21,102.77
	25% Down Payment:	$5,275.69

TAXES NOT INCLUDED. ANY APPLICABLE TAXES WILL BE IN ADDITION UPON INVOICE.

Exceptions: All materials are guaranteed to be as specified. All work is to be completed in a workman-like manner according to standard practices. Any alteration or deviation from the above specifications involving extra costs will become an extra charge over and above the estimate.

Note: This proposal is valid for thirty (30) days from the specific date of the proposal. MPE reserves the right to review and adjust this proposal if not approved within thirty (30) days **or** if any change in manufacturer pricing.

The parties understand that this is a legally binding agreement.

Accepted by:

Company Representative	Midwest Petroleum Equipment Representative
Date	Date

Acceptance of this proposal is subject to the terms and conditions on the attached document.

Payment & Billing Terms:

- 25% Down Payment to secure pricing, due Net 10.
- MPE will invoice for material upon ordering, due Net 10.
- MPE will submit invoice for labor and subcontractor work per monthly progress, due Net 10.
-ACH required unless other payment terms are agreed upon in advance by both parties.

Acknowledgement:_____

ACH Information:

Company Name: Midwest Petroleum Equipment
FEIN: 83-3410900

Bank Information:

Remit to: ar@mwpetroleum.com
Routing: 104910795
Checking Account: 0602652935

The parties understand that this is a legally binding agreement.

Accepted by:

Company Representative	Midwest Petroleum Equipment Representative
Date	Date

Acceptance of this proposal is subject to the terms and conditions on the attached document.

SCOPE OF WORK:

- MPE to install Islander Prime fuel management system.

EXCLUSIONS:

- Ekos
- Electrical
- Site preparation, demolition, hauling, grading, & debris removals
- Surveying & location of private utilities
- Engineering fees including light calculations for canopy
- Shoring for tank hole excavation
- Dewatering (if needed)
- Disposal of groundwater
- Filling the tank with ballast water if needed & discharge of water.
- Backfill compaction testing
- Soil sampling
- Removal and replacement of unsuitable fill
- All concrete pouring and replacement at site including islands & island bumpers
- Grouting including canopy bases
- Additional pipe or fittings due to alterations from site plans provided (proposed fuel & vent piping layouts attached)
- Any additional costs occurred to maintain production during adverse weather conditions
- Painting
- Landscaping
- Finish tile installation
- Costs related to sandy soil conditions
- Dumpster & trash services to be provided by GC
- Additional Tank Surcharges after order date will be passed along to Owner

CORPORATE OFFICE
500 West South Street
Lincoln, NE 68522

www.mwpetroleum.com
service@mwpetroleum.com
402-476-6681

MIDWEST PETROLEUM EQUIPMENT

PROPOSAL ACCEPTANCE TERMS & CONDITIONS

1. The aforesigned hereby warrants and represents to Midwest Petroleum Equipment, LLC ("MPE") MPE that he/she has the authority to enter into this Contract and that ever person, firm and entity either having an interest in the real property defined herein as the Job Site and whose consent to the Job is requited is aware of this Contract and all matters contemplated hereby and has consented thereto (each such person, firm or entity referred to collectively herein as "Owner").
2. **Delay.** If the job is delayed or postponed due to floods, explosions, strikes, storms, terrorism, or other acts of God through no fault of MPE, Owner shall pay, in addition to the Contract Price, any and all increases in the cost of labor and materials in excess of those in effect on the date of this contract.
3. **Liens.** Please take notice that:
    a. Persons or companies furnishing labor or materials for the improvement of real property may enforce a lien upon the improved land if they are not paid for their contributions, even if the parties have no direct contractual relationship with the owner.
    b. Nebraska law permits the owner to withhold from the owner's contractor as much of the contract price as may be necessary to meet the demands of all other lien claimants, pay directly the liens and deduct the cost of them from the contract price, or withhold amounts from the owner's contractor until the expiration of 120 days from the completion of improvements unless the contractor furnished to the owner waivers of claims for mechanic's liens signed by the persons who furnished any labor or material for the improvement and who provided the owner with timely notice.
4. **Indemnification**. Owner shall indemnify and hold harmless MPE or any of MPE's subcontractors from and against any and all claims, damages, losses, and expenses (including attorney's fees) arising out of or resulting from the performance of this contract and related construction project which are caused in full or in part by or arise from any negligent act(s) or omissions(s) of Owner or any agent, employee or representative of Owner.
5. **Insurance**. Owner shall purchase and maintain general liability, fire, theft, and casualty insurance, including vandalism to cover the materials, personal property and improvements and MPE operations during the job at the job site in an amount deemed adequate by MPE. Any loss or damage incurred or suffered by Owner which arises out of or relates, in any way to MPE's performance of the job, and whether covered by insurance or not, shall be the sole responsibility of Owner. MPE shall maintain liability and workers' compensation insurance in the amount required by law or deemed adequate by MPE.
6. **Underground Tanks**. Upon notification by MPE, owner shall be responsible for filling all underground storage tanks with product or, if product is unavailable, water immediately upon MPE placement of tanks into excavations. Owner shall be responsible for any and all damages and losses that may occur due to floating or unstable tanks if the tanks are not filled as requested.
7. **Additional Work or Work Stoppage**. If any governmental body agency requires any other work completed in addition to the contracted job, owner must pay the cost of such other work in an amount equal to the costs incurred by MPE plus overhead. If a stop work order is issued, MPE may remove its equipment from the Job Site. Additional charges will be added to the contract if the Job is recommenced.
8. **Contaminated Soils, or Environmental Clean-up**. Any costs generated during underground excavation for environmental clean-up, site assessments, consulting fees, disposal of contaminated soil, etc., are the sole responsibility of the Owner, unless specifically stated otherwise in our proposal.
9. **Underground Hazards**. Any underground obstructions encountered, such as bed rock, water frost, foundations, non-locatable underground utility lines or excessive caving requiring shoring is not covered, unless specifically agreed to in our proposal.
10. **Partial Completion**. If the job is terminated or postponed for reasons including but not limited to the above and which are not attributable solely to MPE, the owner shall pay toMPE that portion of the Contract Price representing the percentage of the Job completed upon termination or postponement.
11. **Terms of Payment**. Net thirty (30) days unless otherwise stated on Contract. By signing this Contract, Owner agrees to pay on demand all costs and expenses including legal and out-of-pocket expenses incurred in connection with the collection of amounts due under this contract. Interest will be added to unpaid balance at the rate of 1.5% per month (18% per year)
12. **Incorporation**. The terms and conditions set forth above are deemed fully incorporated into the Proposal as though fully set forth therein. By signing the Proposal, the aforesigned acknowledges and represents that the Owner has completely read each term and provision herein and agrees to the same.

Acknowledgement:_____

CITY OF MITCHELL

City Council Meeting
Agenda Item Request

The deadline for agenda items is Wednesday at noon, prior to the City Council Meeting

Meeting Date Requested:	February 18, 2025	**Requested By:**	Stephanie Ellwein
Desired Action of City Council:			
Amount Budgeted in current fiscal year for this item (if applicable):			
Agenda Item:	Authorization to Designate $5,750,000 of General Fund Reserves towards Future Capital Projects		
Explanation/Background of Agenda Item Requested:	Currently, estimated reserves for the Genera Fund are $14,285,326 after the requested 2025 Supplements from requested from departments. This reserve balance is 58% of the 2025 Budgeted General Fund Revenue. The City Council has had an ongoing policy of 35% balance for unobligated, cash reserves. If the City Council approves the designation, the estimated reserve balance would be 35%. These funds can also be un-designated at any time in the future and used as the City Council determines is necessary. The designation just shows the intended use of those funds.		

CITY OF MITCHELL

City Council Meeting
Agenda Item Request

The deadline for agenda items is Wednesday at noon, prior to the City Council Meeting

Meeting Date Requested:	February 18, 2025	**Requested By:**	Stephanie Ellwein
Desired Action of City Council:			
Amount Budgeted in current fiscal year for this item (if applicable):			
Agenda Item:	Authorization to Designate $600,000 in Entertainment Tax Reserves towards the Plaza Expansion Project		
Explanation/Background of Agenda Item Requested:	This action would designated $600,000 of entertainment tax reserves towards the plaza expansion project. The current estimated reserves is $663,538 which is 68% of the 2025 budgeted revenue. After the designation, the estimated reserve balance would be $63,538 which is 7% of the 2025 budgeted revenue. Construction of the Corn Palace Plaza Expansion Project would not start until 2026 and carry forward to 2027. This will allow the City additional time to accumulate funds toward the project. These funds can be un-designated at any time in the future by the City Council and used as the City Council determines is necessary. The designation just shows the intended use of those funds.		

CITY OF MITCHELL

City Council Meeting
Agenda Item Request

The deadline for agenda items is Wednesday at noon, prior to the City Council Meeting

Meeting Date Requested:	February 18, 2025	**Requested By:**	
Desired Action of City Council:			
Amount Budgeted in current fiscal year for this item (if applicable):			
Agenda Item:	Designate $970 in Park Fund Reserves for Disc Golf Signage Improvements		
Explanation/Background of Agenda Item Requested:	Kevin Nelson, Park & Recreation Director, has requested that the City Council designate funds in the Park Fund Reserve towards future sign replacements for Disc Golf. The Park & Rec department received $1,800 in donations from a private fundraising effort to install new disc golf signs. The replacement of the signs was completed in 2023 for $830. The remaining funds were to be designated to use for replacement of the signs in the future. The Park & Rec Department is requesting that the remaining balance of $970 be designated for that purpose so that the donations of funds is used as requested by the private donations.		

CITY OF MITCHELL

City Council Meeting
Agenda Item Request

The deadline for agenda items is Wednesday at noon, prior to the City Council Meeting

Meeting Date Requested:	February 18, 2025	**Requested By:**	
Desired Action of City Council:			
Amount Budgeted in current fiscal year for this item (if applicable):			
Agenda Item:	Recommendation by Mayor Jordan Hanson to Appoint Bryce Berletic to the Park & Recreation board to fill an unexpired term to run from March 2025- June 2025.		
Explanation/Background of Agenda Item Requested:			

CITY OF MITCHELL

City Council Meeting
Agenda Item Request

The deadline for agenda items is Wednesday at noon, prior to the City Council Meeting

Meeting Date Requested:	February 18, 2025	**Requested By:**	CINDY ROTH
Desired Action of City Council:			
Amount Budgeted in current fiscal year for this item (if applicable):			
Agenda Item:	Property Tax Abatement for 2024 Taxes Payable in 2025		
Explanation/Background of Agenda Item Requested:	The assessment should have been owner occupied		

APPLICATION FOR ABATEMENT AND/OR REFUND OF PROPERTY TAXES

Board of County Commissioners of Davison County, South Dakota

Tax Year Payable 2025
Tax Bill # 2024-1169
2025-011A

NAME Jian Fang Weng
MAILING ADDRESS 210 S Duff St.
CITY Mitchell STATE SD ZIP CODE 57301

Legal Description of Property Lot 10 Blk 18 Van Eps 1st Add.

Parcel # 15840-01800-010-00 605-207-0888 Talked with her

Application for an abatement/refund of taxes is being presented due to the following reason (check applicable provision)

____ An error has been made in any identifying entry or description of the real property, in entering the valuation of the real property or in the extension of the tax, to the injury of the complainant;

____ Improvements on any real property were considered or included in the valuation of the real property, which did not exist on the real property at the time fixed by law for making the assessment;

____ The complainant had no taxable interest in the property assessed against the complainant at the time fixed by law for making the assessment;

____ Taxes have been erroneously paid or error made in noting payment or issuing receipt for the taxes paid;

____ The same property has been assessed against the complainant more than once in the same year, and the complainant produces satisfactory evidence that the tax for the year has been paid;

____ A loss occurred because of flood, fire, storm, or other unavoidable casualty; Date of Loss:

____ Structures have been removed after the assessment date (upon verification by the director of equalization) Date structures removed

____ Applicant, having otherwise qualified for the Assessment Freeze for the Elderly and Disabled, but missed the deadline as prescribed in § 10-6A-4.

____ Applicant, having otherwise qualified for classification of owner-occupied single family dwelling, but missed the deadline as prescribed by law due to temporary duty assignment for the military.

____ Tax bill generated in previous year to transfer the title or for relocation of a mobile home.

X Other / Comments: Property purchased by exempt entity Should have been owner occupied

No tax may be abated on any real property which has been sold for taxes, while a tax certificate is outstanding – Any abatement on property within corporate limits of a municipality must be first approved by the governing body of the municipality.)

hereby apply for an abatement / refund of property taxes or the above reasons.

Leah Ussia
Applicant's Signature

Subscribed and sworn to, before me this _____
Day of _____, _____

Notary / Auditor / Deputy Auditor

Approved / Disapproved by City or Township Board _____ Date _____

Approved / Disapproved by County Chairman _____ Date _____

DATE RECEIVED in the County Auditor's office 1/22/25 Received by Patty Wright

Current Tax: $ 1487.72
Adjusted Tax: $ 1241.46
Amt **Abated**/Refunded: $ 246.26

Date Approved: _____

Check Number if Refunded: _____

CITY OF MITCHELL

City Council Meeting
Agenda Item Request

The deadline for agenda items is Wednesday at noon, prior to the City Council Meeting

Meeting Date Requested:	February 18, 2025	**Requested By:**	Joe Schroeder
Desired Action of City Council:			
Amount Budgeted in current fiscal year for this item (if applicable):	203-45220-43300 - $3,000,000		
Agenda Item:	Change Order #1 to Soukup Construction Inc. for Marina Improvements Project #2023-3		
Explanation/Background of Agenda Item Requested:	Change Order No. 1 for Marina Improvements Phases 1 and 2 - City Project #2023-03 Change Order No. 1 reflects actual quantities installed for the trail portion of the project. A major addition is extending the trail from West Harmon to Lions Point Park. Please see attached Change Order #1 for detailed information. Original Contract Amount - $2,667,995.66 Current Contract Amount - $2,667,995.66 Increase of this Change Order - $17,437.75 New Contract Amount - $2,685,433.41 City staff recommends approval of Change Order No. 1 as outlined above. Project Budget: $3,000,000 ($1,000,000 EDA Grant) Current Professional Services - $136,000 Original Project Cost - $2,667,995.66 Change Order No. 1 - $17,437.75 Project Contingency - $178,566.59		

Change Order No. 1

Date of Issuance:	2/18/2025	Effective Date:	2/18/2025
Owner:	City of Mitchell	Owner's Contract No:	EDA Award No. 05-79-06173
Contractor:	Soukup Construction, Inc.	Contractor's Project No.:	N/A
Engineer:	Brosz Engineering	Engineer's Project No.:	2407014
Project:	Marina Improvements Phase 1 - Accessible Trail Improvements and Phase 2 Breakwater Jetty	Contract Name:	Marina Improvements Jetty- Trail

The Contract is modified as follows upon execution of this Change Order:

Bid Schedule 1: Base Bid Change Order

Item	*Decription*	*quantity*	*unit*	*$ / unit*	*extended*
4	Unclassified Excavation	1	LS	$ 500.00	$ 500.00
5	Surface Preparation	35	LF	$ 2.50	$ 87.50
6	Remove and Replace Topsoil	1	LS	$ 500.00	$ 500.00
7	Gravel Cushion	7	TON	$ 32.00	$ 224.00
9	6" Nonreinforced PCC Pavement	31	SY	$ 73.25	$ 2,270.75
17	Type D Permanent Seed Mixture	1	LS	$ 250.00	$ 250.00
16	Fertilizing	1	LS	$ 50.00	$ 50.00
18	Fiber Mulching	1	LS	$ 100.00	$ 100.00
23	Boulder Retaining Wall	-80	FT	$ 81.00	$ (6,480.00)
	The Contractor shall construct the project as per the attached, 240620 - Mitchell Trail Revised Plan Sheets. The change is due to a re-alignment needed to construct the trail through an easement.				
7	Gravel Cushion	26.3	Ton	$ 32.00	$ 841.60
9	6" Nonreinforced PCC Pavement	115.6	SY	$ 73.25	$ 8,467.70
	The Contractor shall construct the 6" Nonreinforced PCC Pavement from Sta 0+00 to the west 130' to connect to the existing City of Mitchell Trail. This change is due to a request from the Palace City Pedelars and the City of Mitchell.				
19	Low Flow Silt Fence	0	FT	$ 3.95	$ -
	The use of Erosion Control Wattles is an approved equal to Low Flow Silt Fence for erosion and sediment control. Erosion Control Wattles installed will be paid for with the bid item Low Flow Silt Fence and at the same unit bid price of $3.95 per foot.				
17	Type D Permanent Seed Mixture	0	LS	$ 1,110.00	$ -
	Type B Permanent Seed Mixture is an approved seed mixture for the project. It may be used in place of the specified Type D seed mixture at no change in the Lump Sum Price.				
20	Remove Trees 0 in to 10 in Caliper	11	EA	$ 48.00	$ 528.00
21	Remove Trees 11 in to 18 in Caliper	23	EA	$ 121.00	$ 2,783.00
22	Remove Trees 19 in to 30 in Caliper	4	EA	$ 1,324.00	$ 5,296.00
	The Contractor shall remove additional trees for the construction of the 6" Nonreinforced PCC Pavement.				
29 CO	Erosion Control Blanket	631	SY	$ 3.20	$ 2,019.20
	The Contractor shall install Erosion Control Blanket at locations staked by the Engineer.				

Attachments Included: 240620 - Mitchell Trail-Revised Plan Sheets

CHANGE IN CONTRACT PRICE	CHANGE IN CONTRACT TIMES [note changes in Milestones if applicable]
Original Contract Price: $ 2,667,995.66	Contract Time: n/a Substantial Completion: July 1, 2025 days or dates
Increase from previously approved Change Orders No. 1 to No. 2: $ -	[Increase] [Decrease] from previous approved Change Orders No. XX to No. XX: - Contract Time: - Substantial Completion: July 1, 2025 days or dates
Contract Price prior to this Change Order: $ 2,667,995.66	Contract Times prior to this Change Order: Contract Time: - Substantial Completion: July 1, 2025 days or dates
Increase of this Change Order: $ 17,437.75	[Increase] [Decrease] of this Change Order: Contract Time: none Substantial Completion: none days or dates
Contract Price incorporating this Change Order: $ 2,685,433.41	Contract Times with all approved Change Orders: Contract Time: n/a Substantial Completion: July 1, 2025 days or dates

REC	ACCEPTED:	ACCEPTED:
By:	By:	By:
	Owner (authorized signature)	Contractor (authorized signature)
Title: Engineer	Title:	Title: Project Manager
Date: 2/3/2025	Date:	Date: 3 Feb 25

EXISTING CONDITIONS/REMOVALS/ESCP

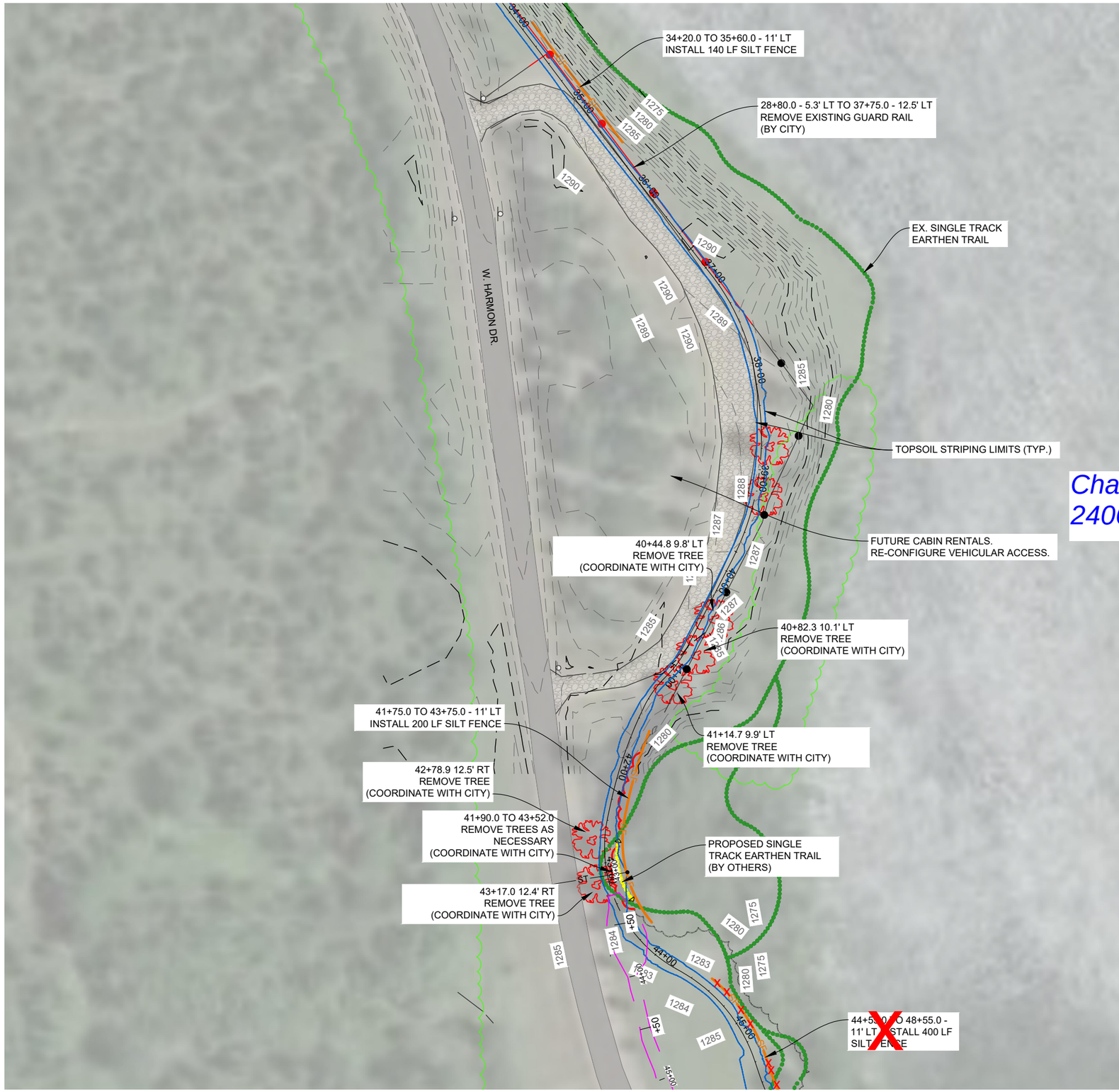

REMOVAL/SITE PREPARATION NOTES

- REMOVAL OF ITEMS SHOWN ON SHEET C4.0 - C4.5 ALONG WITH ANY ADDITIONAL INCIDENTAL REMOVALS SHALL BE IN ACCORDANCE WITH THE STANDARD SPECIFICATIONS SECTION 110 -- REMOVAL OF STRUCTURES AND OBSTRUCTIONS.
- THE CONTRACTOR SHALL BE REQUIRED TO FURNISH A SITE FOR THE DISPOSAL OF CONSTRUCTION DEBRIS GENERATED BY THIS PROJECT, INCLUDING BUT NOT LIMITED TO; BROKEN CONCRETE, ASPHALT, EXCESS SOIL AND GRAVEL, AND OTHER OBJECTIONABLE MATERIALS REMOVED FROM THE SITE. DISPOSAL OF SUCH MATERIALS SHALL BE DONE IN A LEGAL FASHION OFF-SITE.
- CONTRACTOR SHALL INSTALL A STABILIZED CONSTRUCTION EXIT PER SDDOT SPECIAL PLANS. CONTRACTOR SHALL COORDINATE LOCATION WITH CITY OF MITCHELL.
- PRIOR TO CONSTRUCTION, THE CONTRACTOR SHALL INSTALL THE NECESSARY EROSION CONTROL MEASURES, TO MEET THE REQUIREMENTS OF THE SOUTH DAKOTA DEPARTMENT OF TRANSPORTATION STANDARD SPECIFICATIONS SECTION 734 -- EROSION CONTROL AND WATER POLLUTION CONTROL.
- THE CONTRACTOR IS RESPONSIBLE FOR MAINTAINING ALL EROSION CONTROL MEASURES. CONTRACTOR SHALL HAVE NAME AND PHONE NUMBER POSTED ON SITE FOR EROSION AND STORM ISSUES.
- CITY TO DETERMINE TREE REMOVALS IN FIELD.
- CONTRACTOR TO COORDINATE WITH CITY FOR REMOVAL OF CABLE GUARDRAILS. GUARDRAIL REMOVALS AND ANY RESTORATION TO BE PERFORMED BY CITY.

0 50 100
HORZONTAL SCALE 1" = 100'

N

Change Order #1
240620 - Mitchell Trail-Revised Plan Sheets

SHEET
C4.3

PROJ:	2207139
DATE:	2/13/24
DRAWN BY:	AJW
CHECKED:	KN

REV	DATE	BY	DESCRIPTION
1	6/20/24	AJW	CHANGE ORDER 1
2	-	-	
3	-	-	
4	-	-	
5	-	-	

CONSTRUCTION PLAN
MARINA PHASE 1 - ACCESSIBLE TRAIL
EXISTING CONDITIONS/REMOVALS/ESCP

704 East Havens Avenue
Mitchell, SD 57301
(605) 597-4700
www.broszeng.com
BROSZ ENGINEERING, INC.

EXISTING CONDITIONS/REMOVALS/ESCP

SEE SHEET C4.5 FOR CONTINUATION

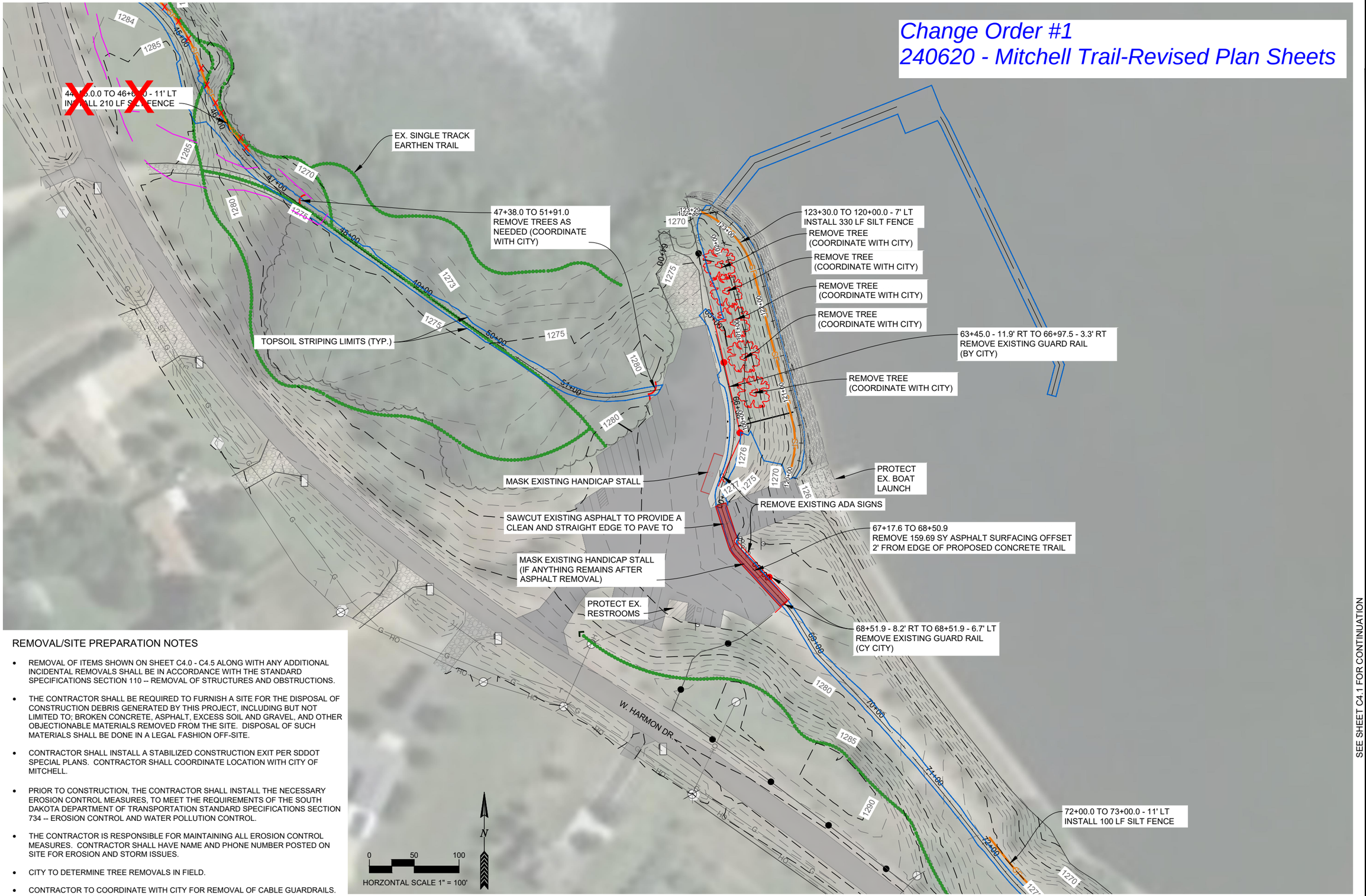

REMOVAL/SITE PREPARATION NOTES

- REMOVAL OF ITEMS SHOWN ON SHEET C4.0 - C4.5 ALONG WITH ANY ADDITIONAL INCIDENTAL REMOVALS SHALL BE IN ACCORDANCE WITH THE STANDARD SPECIFICATIONS SECTION 110 -- REMOVAL OF STRUCTURES AND OBSTRUCTIONS.
- THE CONTRACTOR SHALL BE REQUIRED TO FURNISH A SITE FOR THE DISPOSAL OF CONSTRUCTION DEBRIS GENERATED BY THIS PROJECT, INCLUDING BUT NOT LIMITED TO; BROKEN CONCRETE, ASPHALT, EXCESS SOIL AND GRAVEL, AND OTHER OBJECTIONABLE MATERIALS REMOVED FROM THE SITE. DISPOSAL OF SUCH MATERIALS SHALL BE DONE IN A LEGAL FASHION OFF-SITE.
- CONTRACTOR SHALL INSTALL A STABILIZED CONSTRUCTION EXIT PER SDDOT SPECIAL PLANS. CONTRACTOR SHALL COORDINATE LOCATION WITH CITY OF MITCHELL.
- PRIOR TO CONSTRUCTION, THE CONTRACTOR SHALL INSTALL THE NECESSARY EROSION CONTROL MEASURES, TO MEET THE REQUIREMENTS OF THE SOUTH DAKOTA DEPARTMENT OF TRANSPORTATION STANDARD SPECIFICATIONS SECTION 734 -- EROSION CONTROL AND WATER POLLUTION CONTROL.
- THE CONTRACTOR IS RESPONSIBLE FOR MAINTAINING ALL EROSION CONTROL MEASURES. CONTRACTOR SHALL HAVE NAME AND PHONE NUMBER POSTED ON SITE FOR EROSION AND STORM ISSUES.
- CITY TO DETERMINE TREE REMOVALS IN FIELD.
- CONTRACTOR TO COORDINATE WITH CITY FOR REMOVAL OF CABLE GUARDRAILS. GUARDRAIL REMOVALS AND ANY RESTORATION TO BE PERFORMED BY CITY.

SEE SHEET C4.1 FOR CONTINUATION

SHEET
C4.4

PROJ:	2207139
DATE:	2/13/24
DRAWN BY:	AJW
CHECKED:	KN

REV	DATE	BY	DESCRIPTION
1	6/20/24	AJW	CHANGE ORDER 1
2	-	-	
3	-	-	
4	-	-	
5	-	-	

CONSTRUCTION PLAN
MARINA PHASE 1 - ACCESSIBLE TRAIL
EXISTING CONDITIONS/REMOVALS/ESCP

704 East Havens Avenue
Mitchell, SD 57301
(605) 597-4700
www.broszeng.com
BROSZ ENGINEERING, INC.

BID SCHEDULE 1: NORTH MARINA TRAIL

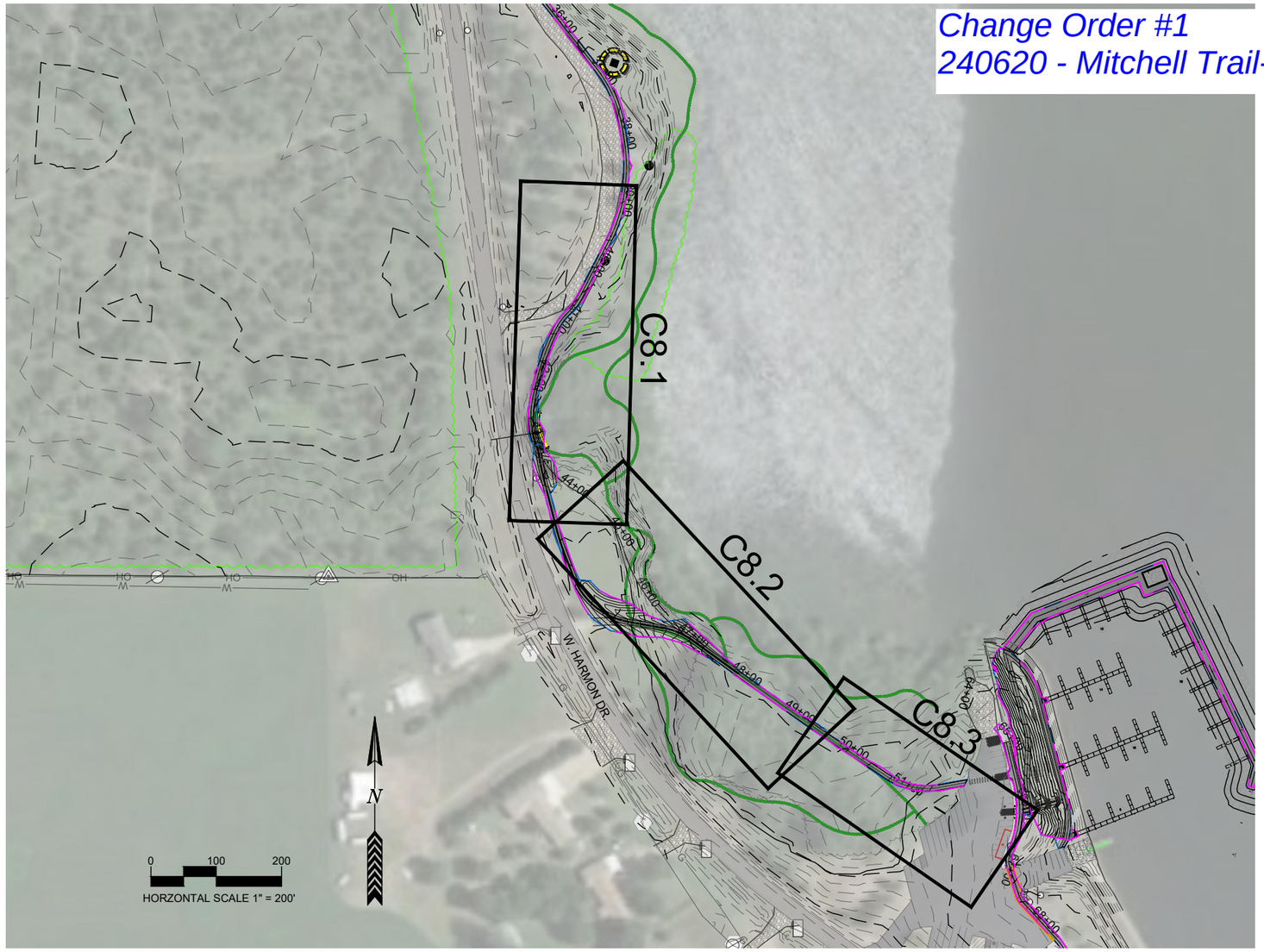

TABLE OF TYPICAL SECTIONS		
BEGIN STATION	END STATION	TYPICAL SECTION
29+80.00	51+91.10	8 FOOT WIDE TRAIL, 1.00% SLOPE LEFT

SHEET
C8.0

PROJ:	2207139
DATE:	2/13/24
DRAWN BY:	AJW
CHECKED:	KN

REV	DATE	BY	DESCRIPTION
1	-	-	
2	-	-	
3	-	-	
4	-	-	
5	-	-	

CONSTRUCTION PLAN
MARINA PHASE 1 - ACCESSIBLE TRAIL
NORTH MARINA TRAIL - SHEET INDEX

704 East Havens Avenue
Mitchell, SD 57301
(605) 597-4700
www.broszeng.com
BROSZ ENGINEERING, INC.

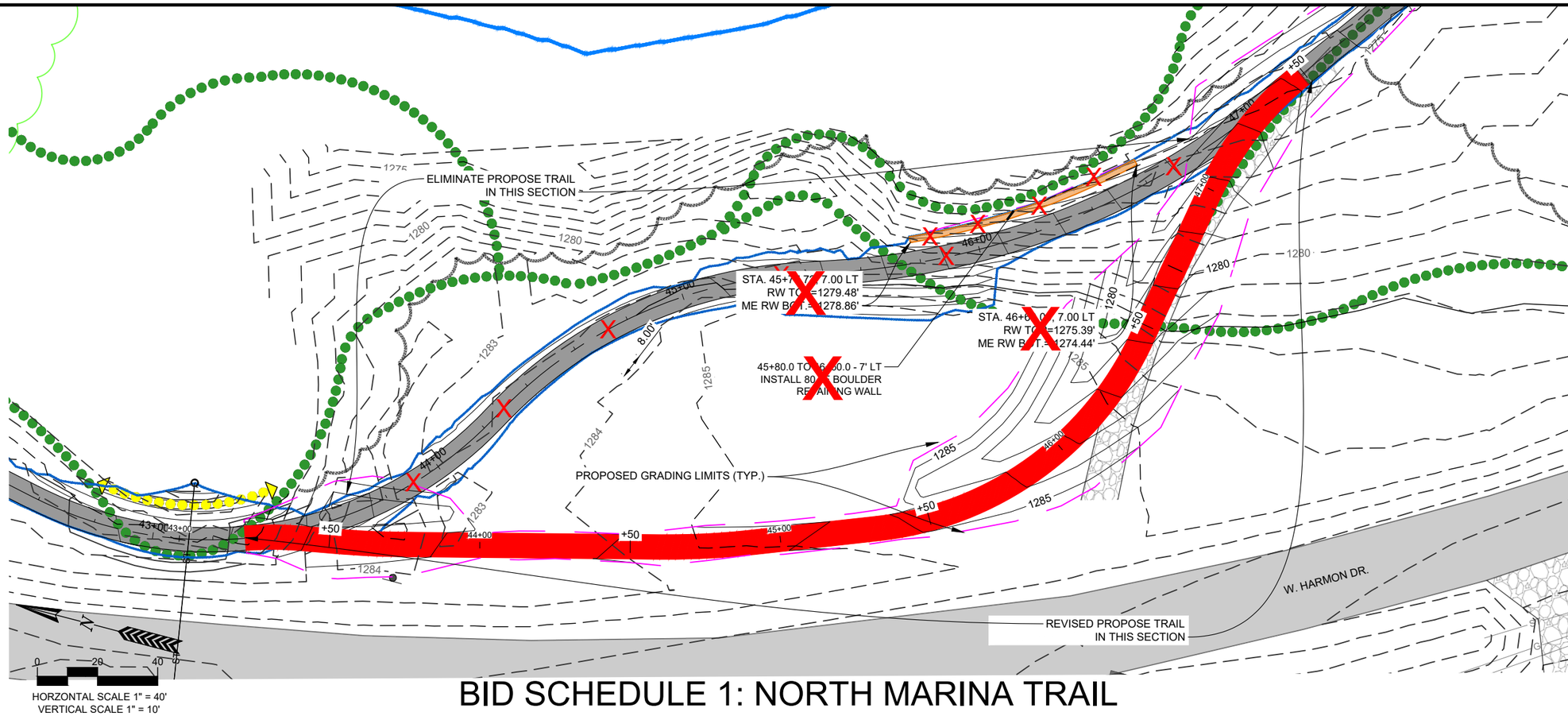

BID SCHEDULE 1: NORTH MARINA TRAIL

Change Order #1
240620 - Mitchell Trail-Revised Plan Sheets

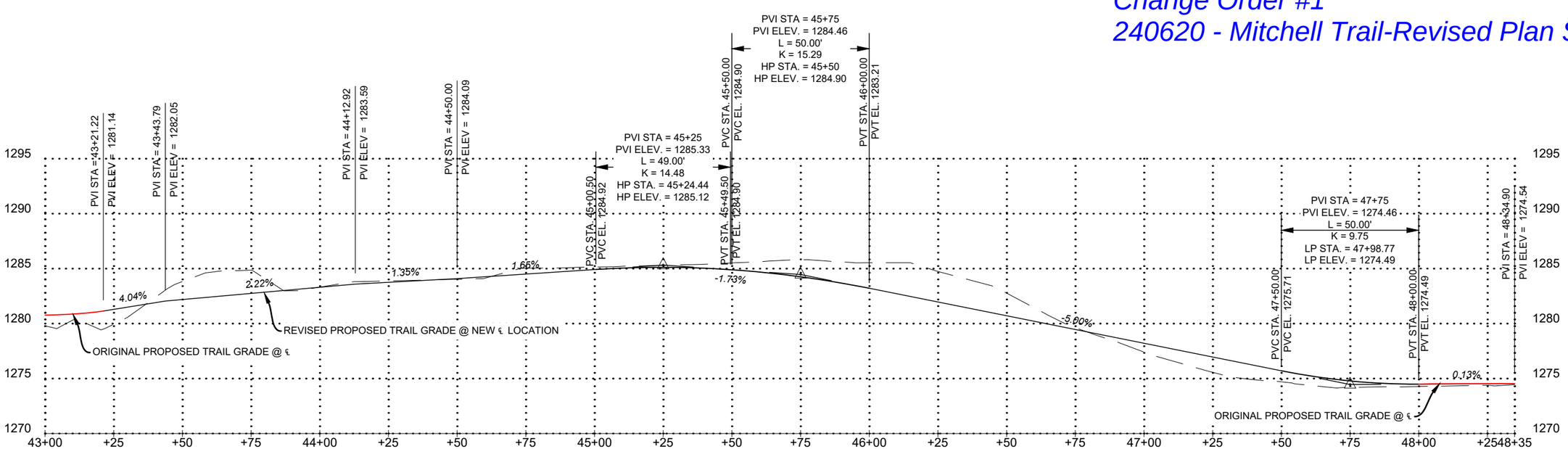

CHANGE ORDER 1 QUANTITIY REVISIONS

UNCLASSIFIED EXCAVATION-CO1 REVISION
1 LS

SURFACE PREPARATION
CO1 REVISION = 35 LF

REMOVE AND REPLACE TOPSOIL-CO1 REVISION
1 LS

6" NONREINFORCED PCC PAVEMENT
CO1 REVISION = 31 SY

GRAVEL CUSHION
CO1 REVISION = 7 TON

TYPE D PERMANENT SEED MIXTURE-CO1 REVISION
1 LS

FIBER MULCHING-CO1 REVISION
1 LS

FERTILIZING-CO1 REVISION
1 LS

LOW FLOW SILT FENCE
-610 LF

BOULDER RETAINING WALL
-80 LF

SHEET
C11.5

PROJ:	2207139
DATE:	2/13/24
DRAWN BY:	AJW
CHECKED:	KN

REV	DATE	BY	DESCRIPTION
1	6/20/24	AJW	CHANGE ORDER 1
2	-	-	
3	-	-	
4	-	-	
5	-	-	

CONSTRUCTION PLAN
MARINA PHASE 1 - ACCESSIBLE TRAIL
NORTH MARINA TRAIL - PLAN & PROFILE (1 OF 3)

2309 W. 50th St.
Sioux Falls, SD 57105
(605) 336-1676
www.broszeng.com
BROSZ ENGINEERING, INC.

Change Order #1
240620 - Mitchell Trail-Revised Plan Sheets

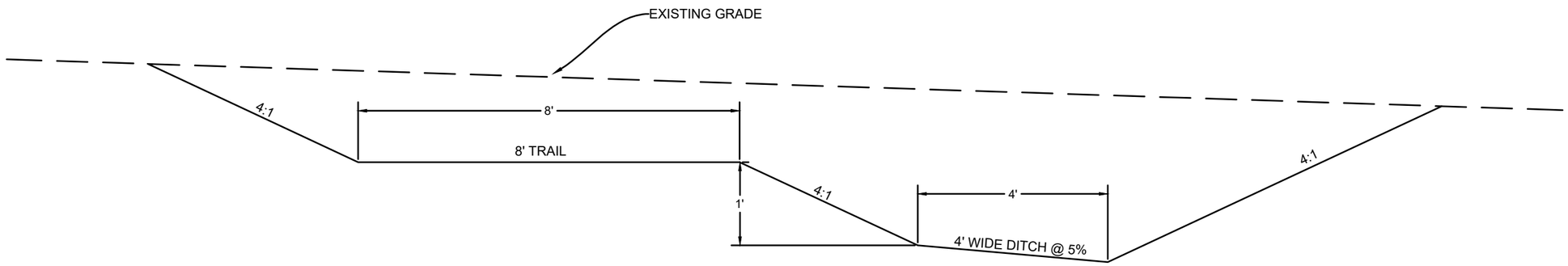

PROPOSED REVISED TRAIL GRADING IN CUT SECTIONS

SHEET
C11.6

PROJ:	2207139
DATE:	1/17/24
DRAWN BY:	AJW
CHECKED:	KN

REV	DATE	BY	DESCRIPTION
1	-	-	
2	-	-	
3	-	-	
4	-	-	
5	-	-	

CONSTRUCTION PLAN
MARINA PHASE 1 - ACCESSIBLE TRAIL
REVISED TRAIL GRADING - CUT SECTION

2309 W. 50th St.
Sioux Falls, SD 57105
(605) 336-1676
www.broszeng.com
BROSZ ENGINEERING, INC.

CITY OF MITCHELL

City Council Meeting
Agenda Item Request

The deadline for agenda items is Wednesday at noon, prior to the City Council Meeting

Meeting Date Requested:	February 18, 2025	**Requested By:**	CINDY ROTH
Desired Action of City Council:			
Amount Budgeted in current fiscal year for this item (if applicable):			
Agenda Item:	Set date of March 3, 2025 for Hearing and Action on the Application to Transfer RL-5756 Retail (on-sale) Liquor License from Flats on Havens LLC dba Flats on Havens,1525 W Havens Ave to Gjocaj Inc dba Amore Italian Ristorante & Bar, 1525 W Havens Ave		
Explanation/Background of Agenda Item Requested:	All required documents have been submitted.		

Date Received_____
Date Issued_____

License No._____

Uniform Alcoholic Beverage License Application

A. Owner Name and Address

Agon Ahmeti
1183 Old Fannin Rd
Brandon MS 39047

Owner's Telephone #: 406-920-9699

B. Business Name and Address

Gjocaj Inc OBA: Amore Italian Ristorante & Bar
1525 W Havens Avenue Mitchell SD 573

Business Telephone #: 406-920-9699

Place of business is located in a municipality? ☒ Yes ☐ No

County: Davison

Do you own or lease this property? ☐ Own ☒ Lease

Are real property taxes paid to date? ☒ Yes ☐ No

C. Indicate the class of license being applied for (submit separate application for each class of license).

- ☐ Retail (on-sale) Liquor
- ☒ Retail (on-sale) Liquor - Restaurant
- ☐ Convention Center (on-sale) Liquor
- ☐ Package (off-sale) Liquor
- ☐ Retail (on-off sale) Wine and Cider
- ☐ Retail (on-off sale) Malt Beverage & SD Farm Wine
- ☐ Package Delivery
- ☐ Hunting Preserve
- ☐ Other_____

Is this license in active use? ☒ Yes ☐ No

Do you or any officers, directors, partners, or stockholders hold any other alcohol retail, manufacturing, or wholesaler licenses?
☐ Yes ☒ No **If Yes, please list on the back page.**

D. Legal description of licensed premise:

Lot 1, Block 4 of Sunny Site Addition
City of Mitchell, Davidson county,
South Dakota

Have you ever been convicted of a felony? ☐ Yes ☒ No

E. State Sales Tax Number 1042-0743-ST

F. New license ☐ Transfer? ($150) ☒ Re-issuance ☐

G. CERTIFICATE: The undersigned applicant certifies under the penalties of perjury that all statements provided herein are true and correct; that the said applicant complies with all of the statutory requirements for the class of license being applied for and in addition agrees to permit agents of the Department of Revenue access to the licensed premises and records as provided in SDCL 35-2-2.1, and agrees this application shall constitute a contract between applicant and the State of South Dakota entitling the same or any peace officers to inspect the premises, books and records at any time for the purpose of enforcing the provisions of Title 35 SDCL, as amended.

Date 01/30/25 Print Name Agon Ahmeti Signature [signature]

H. APPROVAL OF LOCAL GOVERNING BODY – Notice of hearing was published on _____. Public hearing on the application was held _____, not less than SEVEN (7) days after official publication. The governing body by majority vote recommends the approval and granting of this license and certifies that requirements as to location and suitability of premises and applicant have been reviewed and conform to the requirements of local and South Dakota law.

Renewal - no public hearing held ☐
Amount of fee collected with application $_____
Amount of fee retained $_____
Forwarded with application $_____

For Local Government Use

(Seal) _____
Mayor or Chairman

If disapproved, endorse reason thereon and return to applicant

Transferred (State Use)

From:_____

Sales tax approval_____ Date _____

STATE LIQUOR AUTHORITY:

APPROVAL_____ REVIEW_____

Please complete the reverse side if applicable

Company supplement information
(For corporate/partnership/LP/LLC applicants)

Name of corporation/partnership/LP LLC Gjoca Inc DBA: Amore Italian Ristorante & Bar

Address of office and principal place of business of corporation/partnership/LP/LLC 1525 W Havens Ave Mitchell SD 57301

Are all managing officers of this corporation/partnership/LP/LLC of good moral character having never been convicted of a felony? ☒ Yes ☐ No

Name, title of office, occupation and address of each of the officers/owners of the corporation, partnership, LP or LLC:

Name	Office	Address	Occupation
Agon Ahmeti		1525 W Havens Ave Mitchell SD 57031	President / OWNER

Name of any officers, directors, partners or stockholders of applicant having a financial interest or capital stock in any other alcoholic beverage license:

Name	Type of License, License Number, Financial Interest Held, and Address of Business Location

Where and with whom are all company records kept, such as charter, by-laws, minutes, accounts, notes payable, and notes and accounts receivable, etc?

All Are Kept at 1525 W Haven Ave Mitchell SD 57031 with Agon Ahmeti

With signature the applicant agrees to the following:

That the applicant company will comply with all provisions of ARSD chapter No. 64:75:02 of the Department of Revenue, relating to the transfer of stock and prior approval of the transfer of such stock by the Secretary of Revenue and violation of any of the provisions of said regulation or failure to comply therewith, whether by the undersigned corporation, partnership/LP/LLC or by any stockholder thereof, or by anyone interested in said company, shall constitute cause for revocation or suspension of any license issued pursuant to and in reliance on this application, or for refusal to renew such license upon expiration thereof.

We the undersigned officers and directors of the applicant company acknowledge that the within supplement application form is true and correct in every respect and that there exists no financial arrangement concerning this or any other alcoholic beverage license than that expressly set forth above. If company stock is to be transferred we ask for approval of such voluntary stock transfer.

Signature of Authorized Officer/Director/Partner **Date**

01/30/25

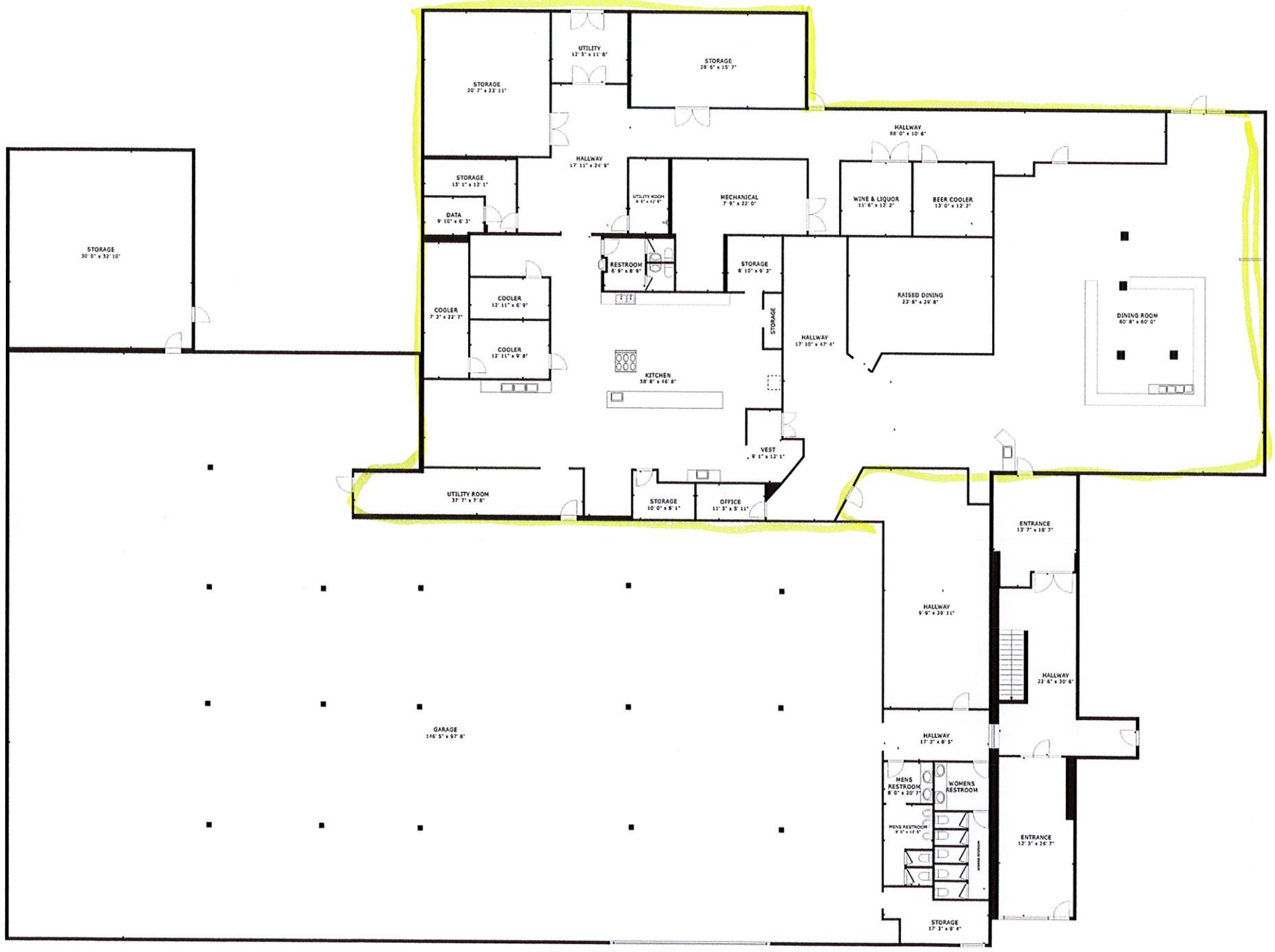

FLOOR PLAN

GROSS INTERNAL AREA
FLOOR PLAN 13,539 sq.ft.
EXCLUDED AREAS : GARAGE 11,847 sq.ft.
TOTAL : 13,539 sq.ft.
SIZES AND DIMENSIONS ARE APPROXIMATE, ACTUAL MAY VARY.

Matter

PAY ESTIMATES FOR FEBRUARY 18, 2025

CONTRACTORS	PROJECT	P.E. #	AMOUNT	PAID TO DATE	CONTRACT AMOUNT
Infrastructure Design Group	#2020-20 Ground Storage Tank - Piping	#52A	$ 36,631.11		
Infrastructure Design Group	#2020-20 Ground Storage Tank - Piping	#53	$ 639.50	$ 1,403,215.88	$ 1,462,687.34
HDR Engineering Inc.	#2021-31 North Waste Water Improvements	#40	$ 1,377.50	$ 1,753,904.98	$ 1,806,325.00
John T. Jones Construction Comp	#2022-1 WWTP -Phase II - South Plant	#6	$ 798,565.07	$ 5,639,875.84	$ 31,328,750.00
HDR Engineering Inc.	#2022-1 WWTP -Phase II - South Plant	#25	$ 97,064.24	$ 1,586,450.63	$ 1,908,860.00
GeoTek	#2022-1 South WWTP - Phase II - Schedule A	#5A	$ 2,490.00	$ 18,276.75	$ 70,350.00
Soukup Construction, Inc.	#2023-3 Marina Improvements	#4	$ 311,504.45	$ 1,111,656.76	$ 2,685,433.41
Halme, Inc.	#2023-6 North Harmon Sanitary Sewer Outfall	#5	$ 170,098.32	$ 1,992,940.76	$ 3,347,607.25
Brosz Engineering	#2023-23 West End Bridge (BIG Grant)	#8	$ 890.00	$ 30,400.00	$ 49,400.00
Siteworks, Inc.	#2024-24 Mattie Street Utility Extension	#3	$ 6,814.43	$ 136,288.64	$ 136,288.64
GeoTek Engineering & Testing	#2025-28 Old Landfill Leachate Monitoring	#1	$ 4,325.00	$ 4,325.00	$ 11,500.00
	TOTALS		$ 1,430,399.62	$ 13,677,335.24	$ 42,807,201.64

Prepared by Deb Hanson-Sudbeck

PACKET : 07238 07239 07240 07241
VENDOR SET: Mult
FUND : 101 GENERAL
DEPARTMENT: 1110 CITY COUNCIL BANK: Multi
BUDGET TO USE: CB-CURRENT BUDGET

VENDOR	NAME	ITEM #	G/L ACCOUNT NAME	DESCRIPTION	CHECK#	AMOUNT
01-03498	COLUMN SOFTWARE PBC					
		I-35882B15-0150	101-41110-42300	LEGAL PUBLICA ALCOHOL NOTICE OF HEARING	205596	17.02
		I-35882B15-0151	101-41110-42300	LEGAL PUBLICA AIRPORT HANGAR UPDATE	205596	164.16
		I-35882B15-0153	101-41110-42300	LEGAL PUBLICA PICKLEBALL NOTICE,INV TO BID	205596	93.57
		I-35882B15-0154	101-41110-42300	LEGAL PUBLICA 01.21.25 MEETING MINUTES	205596	604.11
				DEPARTMENT 1110 CITY COUNCIL	TOTAL:	878.86

PACKET : 07238 07239 07240 07241
VENDOR SET: Mult
FUND : 101 GENERAL
DEPARTMENT: 1220 CITY ADMINISTRATOR BANK: Multi
BUDGET TO USE: CB-CURRENT BUDGET

VENDOR	NAME	ITEM #	G/L ACCOUNT NAME	DESCRIPTION	CHECK#	AMOUNT
01-06750	MITCHELL TELECOM					
		I-11078831	101-41220-42800	UTILITIES-TEL ACCT #00223662-2	205668	1.88
01-08815	STEPHANIE ELLWEIN					
		I-02072025	101-41220-42700	TRAVEL, CONF, PIERRE SDML,SDCMA MEALS,MILEAG	205622	245.69
				DEPARTMENT 1220 CITY ADMINISTRATOR TOTAL:		247.57

PACKET : 07238 07239 07240 07241
VENDOR SET: Mult
FUND : 101 GENERAL
DEPARTMENT: 1410 ATTORNEY'S OFFICE BANK: Multi
BUDGET TO USE: CB-CURRENT BUDGET

VENDOR	NAME	ITEM #	G/L ACCOUNT NAME	DESCRIPTION	CHECK#	AMOUNT
01-06739	THOMSON REUTERS - WEST					
		I-851415244	101-41410-42610	WEST GROUP LA JAN 2025 ONLINE SUBSCRIPTION	205717	824.82
01-06750	MITCHELL TELECOM					
		I-11078831	101-41410-42810	UTILITIES-TEL ACCT #00223662-2	205668	0.31
				DEPARTMENT 1410 ATTORNEY'S OFFICE TOTAL:		825.13

PACKET : 07238 07239 07240 07241
VENDOR SET: Mult
FUND : 101 GENERAL
DEPARTMENT: 1420 FINANCE BANK: Multi
BUDGET TO USE: CB-CURRENT BUDGET

VENDOR	NAME	ITEM #	G/L ACCOUNT NAME	DESCRIPTION	CHECK#	AMOUNT
01-03678	INTERSTATE OFFICE PRODU					
		I-01EF5914	101-41420-42600	SUPPLIES & MA BINDER	205642	48.34
01-06750	MITCHELL TELECOM					
		I-11078831	101-41420-42800	UTILITIES - T ACCT #00223662-2	205668	1.75
01-09703	AMAZON CAPITAL SERVICES					
		I-1CVM-THD4-RHW1	101-41420-42600	SUPPLIES & MA WIRELESS MOUSE	205568	130.66
		I-1H4G-MKLJ-7L6N	101-41420-42600	SUPPLIES & MA BINDER	205568	26.12
				DEPARTMENT 1420 FINANCE	TOTAL:	206.87

PACKET : 07238 07239 07240 07241
VENDOR SET: Mult
FUND : 101 GENERAL
DEPARTMENT: 1440 HUMAN RESOURCES BANK: Multi
BUDGET TO USE: CB-CURRENT BUDGET

VENDOR	NAME	ITEM #	G/L ACCOUNT NAME	DESCRIPTION	CHECK#	AMOUNT
01-03678	INTERSTATE OFFICE PRODU					
		I-01EF5337	101-41440-42600	SUPPLIES & MA LAMINATE POUCH	205642	28.32
01-04779	AVERA OCCUPATIONAL MEDI					
		I-00116993-00	101-41440-42231	EMPLOYEE PHYS LABS	205573	36.60
		I-00117931-00	101-41440-42231	EMPLOYEE PHYS PHYSICALS,DRUG SCREENINGS	205573	2,284.00
01-06750	MITCHELL TELECOM					
		I-11078831	101-41440-42800	UTILITIES ACCT #00223662-2	205668	0.41
01-08711	ONE SOURCE THE BACKGROU					
		I-2022172317	101-41440-42210	PROFESSIONAL BACKGROUND CHECKS	205682	323.00
01-08900	THOMAS L PRICE INC					
		I-01282025	101-41440-42231	EMPLOYEE PHYS PSYCHOLOGICAL SCREENING	205716	350.00
		I-012825	101-41440-42231	EMPLOYEE PHYS PSYCHOLOGICAL SCREENING	205716	350.00
				DEPARTMENT 1440 HUMAN RESOURCES	TOTAL:	3,372.33

PACKET : 07238 07239 07240 07241
VENDOR SET: Mult
FUND : 101 GENERAL
DEPARTMENT: 1920 MUNICIPAL BUILDINGS BANK: Multi
BUDGET TO USE: CB-CURRENT BUDGET

VENDOR	NAME	ITEM #	G/L ACCOUNT NAME	DESCRIPTION	CHECK#	AMOUNT
01-01830	NORTHWESTERN ENERGY					
		I-2587293-8.01.25	101-41920-42811	UTILITIES-CIT 612 N MAIN ST	205672	1,976.51
01-08281	VESTIS					
		I-5380258063	101-41920-43410	REPAIRS-CITY MAT CLEANING	205729	66.84
				DEPARTMENT 1920 MUNICIPAL BUILDINGS	TOTAL:	2,043.35

PACKET : 07238 07239 07240 07241
VENDOR SET: Mult
FUND : 101 GENERAL
DEPARTMENT: 1935 INFORMATION TECHNOLOGY BANK: Multi
BUDGET TO USE: CB-CURRENT BUDGET

VENDOR	NAME	ITEM #	G/L ACCOUNT NAME		DESCRIPTION	CHECK#	AMOUNT
01-00356	QUALIFIED PRESORT SERVI						
		I-2279-460	101-41935-42615	POSTAGE	POSTAGE 01.16-31.2025	205687	368.19
01-03678	INTERSTATE OFFICE PRODU						
		I-01EF5057	101-41935-42640	COPY MACHINE	PAPER	205642	218.10
01-05195	A & B BUSINESS SOLUTION						
		I-IN1227644	101-41935-42250	MANAGED PRINT	CT9857-01 PAYMENT	205562	4,622.70
01-06700	SWIFTEL COMMUNICATIONS						
		I-10086223	101-41935-42920	COMPUTER SOFT	BUTTON MODULE FOR PHONE	205714	495.00
01-06750	MITCHELL TELECOM						
		I-11078831	101-41935-42850	UTILITIES/TEL	ACCT #00223662-2	205668	2,498.83
		I-11078831	101-41935-42850	UTILITIES/TEL	ACCT #00223662-2	205668	0.26
01-08881	CLOUDCOVER USA						
		I-3401	101-41935-42920	COMPUTER SOFT	FIREWALL RENEWAL	205594	6,100.00
01-09769	N-ABLE TECHNOLOGIES LTD						
		I-4152732	101-41935-42920	COMPUTER SOFT	DEC 2024 DATA BACKUP & RECOVER	205670	105.12
		I-4223187	101-41935-42920	COMPUTER SOFT	JAN 25 DATA BACKUP & RECOVERY	205670	105.12
01-09876	CONVERGEONE, INC						
		I-INV1052384	101-41935-42920	COMPUTER SOFT	ONESIGN MAINTENANCE/SUPPORT	205597	5,354.10

DEPARTMENT 1935 INFORMATION TECHNOLOGY TOTAL: 19,867.42

PACKET : 07238 07239 07240 07241
VENDOR SET: Mult
FUND : 101 GENERAL
DEPARTMENT: 2110 POLICE DEPARTMENT BANK: Multi
BUDGET TO USE: CB-CURRENT BUDGET

VENDOR	NAME	ITEM #	G/L ACCOUNT NAME		DESCRIPTION	CHECK#	AMOUNT
01-00140	AL'S ENGRAVING						
		I-18958	101-42110-42600	SUPPLIES	OFFICE SIGNS	205566	16.95
01-00712	NAPA CENTRAL						
		I-810973	101-42110-42500	REPAIR & MAIN	CONTROL ARM BUSHING,FRONT	205671	125.08
01-00809	GALLS LLC						
		I-030116276	101-42110-42640	UNIFORM ALLOW	PIN	205628	28.53
		I-030224363	101-42110-42640	UNIFORM ALLOW	RESICK SHIRTS,GUN LIGHTS,FLASH	205628	631.00
		I-030264614	101-42110-42640	UNIFORM ALLOW	ZIP SHIRTS	205628	111.98
01-01072	DAVISON COUNTY SEARCH A						
		I-01082025	101-42110-42906	DAVISON COUNT	2025 ALLOCATION	205613	1,500.00
01-01322	LARRY'S I-90 SERVICE IN						
		I-105694	101-42110-42610	GAS OIL TIRES	FIREHAWK TIRES	205651	239.78
01-01532	FEDEX						
		I-8-754-26048	101-42110-42200	PROFESSIONAL	EVIDENCE MAILINGS	205626	19.06
01-01590	MCLEOD'S PRINTING						
		I-81531	101-42110-42600	SUPPLIES	RESICK ADDRESS STAMP	205656	28.90
		I-81790	101-42110-42600	SUPPLIES	BUSINESS CARDS	205656	104.92
01-01830	NORTHWESTERN ENERGY						
		I-2949839-1.02.25	101-42110-42810	UTILITIES	122 S ROWLEY ST	205672	535.33
01-02413	PIONEER DESIGNS						
		I-32035	101-42110-42200	PROFESSIONAL	ANIMAL CONTROL LETTERING REMVD	205686	518.00
01-02679	MENARD'S INC						
		I-82530	101-42110-42600	SUPPLIES	TAPE,AIR ACCESSORY,AIR HOSE	205658	444.63
01-02684	STREICHER'S - MINNEAPOL						
		I-I1742755	101-42110-42640	UNIFORM ALLOW	VESTS	205708	1,128.17
		I-I1744289	101-42110-42640	UNIFORM ALLOW	NAME TAG	205708	11.99
		I-I1744488	101-42110-42640	UNIFORM ALLOW	NAME TAGS	205708	11.99
01-04856	IACP MEMBERSHIP						
		I-2025	101-42110-42200	PROFESSIONAL	KNIPPLING-2025 DUES	205636	220.00
01-06750	MITCHELL TELECOM						
		I-11078831	101-42110-42800	TELEPHONE	ACCT #00223662-2	205668	33.38
01-07615	SD DEPT OF REVENUE						
		I-2025	101-42110-42600	SUPPLIES	SIX CONFIDENTAL LICENSE RENEW	205700	6.00
01-08281	VESTIS						
		I-6380258663	101-42110-42200	PROFESSIONAL	MAT CLEANING	205729	68.65

PACKET : 07238 07239 07240 07241
VENDOR SET: Mult
FUND : 101 GENERAL
DEPARTMENT: 2110 POLICE DEPARTMENT BANK: Multi
BUDGET TO USE: CB-CURRENT BUDGET

VENDOR	NAME	ITEM #	G/L ACCOUNT NAME	DESCRIPTION	CHECK#	AMOUNT
01-09349	HOWES OIL CO					
		I-352795	101-42110-42610	GAS OIL TIRES UNLEADED GAS	205635	5,476.42
01-09991	DAKOTA PRO STRIPING & I					
		I-4798	101-42110-42600	SUPPLIES TOTES OF ECO THAW SALT	205606	252.38
01-10486	AT&T MOBILITY - POLICE					
		I-9001X01232025	101-42110-42800	TELEPHONE ACCT #287283989001	205572	1,072.23
				DEPARTMENT 2110 POLICE DEPARTMENT	TOTAL:	12,585.37

PACKET : 07238 07239 07240 07241
VENDOR SET: Mult
FUND : 101 GENERAL
DEPARTMENT: 2130 TRAFFIC DEPARTMENT BANK: Multi
BUDGET TO USE: CB-CURRENT BUDGET

VENDOR	NAME	ITEM #	G/L ACCOUNT NAME	DESCRIPTION	CHECK#	AMOUNT
01-01020	CENTRAL ELECTRIC COOPER					
		I-12553001.02.25	101-42130-42835	UTILITIES-STR CARL RD	205589	276.00
		I-14579001.02.25	101-42130-42835	UTILITIES-STR 25040 SD HWY 37	205589	402.00
01-01199	STURDEVANTS AUTO VALUE					
		I-815050719	101-42130-42610	GAS, OIL, TIR OIL FILTER,SD DIESEL	205710	38.63
01-01322	LARRY'S I-90 SERVICE IN					
		I-105385	101-42130-42610	GAS, OIL, TIR FLATBED TRUCK TIRES	205651	950.80
01-01450	MUTH ELECTRIC INC					
		I-677291	101-42130-42570	REPAIRS-TRAFF REPAIR PEDESTRIAN BUTTON HIT	205669	1,220.55
		I-677478	101-42130-42535	LIGHT MAINTEN DECORATIVE POLES SUPPLIES	205669	356.39
01-01518	VERIZON WIRELESS					
		I-6104757903	101-42130-42820	TELEPHONE ACCT #886931646-00001	205727	135.49
01-01830	NORTHWESTERN ENERGY					
		I-2573393-2.02.25	101-42130-42810	UTILITIES-TRA E 1ST AND GAMBLE ST	205672	21.77
		I-2573626-5.02.25	101-42130-42810	UTILITIES-TRA 1030 E 1ST AVE	205672	13.88
		I-2581243-9.01.25	101-42130-42835	UTILITIES-STR STREET LIGHTS	205672	21,484.34
		I-2581249-6.01.25	101-42130-42520	EMERGENCY SIR E GOLF COURSE SIREN	205672	31.87
		I-2581251-2.01.25	101-42130-42520	EMERGENCY SIR 1221 S MINNESOTA ST	205672	24.33
		I-2581252-0.01.25	101-42130-42520	EMERGENCY SIR 100 MATTIE ST	205672	33.59
		I-2581521-8.01.25	101-42130-42810	UTILITIES-TRA W HAVENS AND OHLMAN	205672	155.74
		I-2582741-1.01.25	101-42130-42835	UTILITIES-STR I 90 AND OHLMAN	205672	632.62
		I-2583138-9.01.25	101-42130-42810	UTILITIES-TRA W UNIV AND NORWAY	205672	14.06
		I-2583139-7.01.25	101-42130-42810	UTILITIES-TRA 1309 W UNIVERSITY AVE	205672	13.71
		I-2583145-4.01.25	101-42130-42810	UTILITIES-TRA 1522 W UNIVERSITY AVE	205672	13.37
		I-2583147-0.01.25	101-42130-42810	UTILITIES-TRA 310 W NORWAY	205672	13.88
		I-2583319-5.01.25	101-42130-42810	UTILITIES-TRA HAVENS AND MINN ST	205672	108.05
		I-2583840-0.01.25	101-42130-42810	UTILITIES-TRA S SANBORN AND HAVEN ST	205672	136.54
		I-2585321-9.01.25	101-42130-42810	UTILITIES-TRA E HAVENS AND BURR ST	205672	227.30
		I-2585416-7.01.25	101-42130-42810	UTILITIES-TRA 700 E NORWAY AVE	205672	357.64
		I-2585457-1.01.25	101-42130-42810	UTILITIES-TRA 700 E KAY AVE	205672	219.91
		I-2585833-3.01.25	101-42130-42810	UTILITIES-TRA 1909 N MAIN ST	205672	165.34
		I-2586693-0.01.25	101-42130-42835	UTILITIES-STR 112 W 2ND AVE	205672	205.84
		I-2586929-8.01.25	101-42130-42835	UTILITIES-STR 111 W 5TH AVE	205672	217.44
		I-2586966-0.01.25	101-42130-42835	UTILITIES-STR 111 W 7TH AVE	205672	543.80
		I-2719916-5.01.25	101-42130-42520	EMERGENCY SIR CABELA AND SPRUCE EMERGENCY SI	205672	31.53
		I-2745956-9.01.25	101-42130-42520	EMERGENCY SIR W END BOAT RAMP	205672	34.62
		I-2748245-4.01.25	101-42130-42810	UTILITIES-TRA BURR & SPRUCE SIGNAL LIGHTS	205672	367.68
		I-2748246-2.01.25	101-42130-42810	UTILITIES-TRA N RAMPS I 90 SIGNAL LIGHTS	205672	225.26
		I-2778164-0.02.25	101-42130-42810	UTILITIES-TRA 1ST AND SANBORN ST	205672	147.68
		I-2781011-8.02.25	101-42130-42520	EMERGENCY SIR 1001 E BIRCH AVE PWSP SIREN	205672	33.42
		I-2793476-9.02.25	101-42130-42810	UTILITIES-TRA 1ST AND BURR ST	205672	72.13
		I-2812391-7.01.25	101-42130-42520	EMERGENCY SIR 5861 TOWER RD	205672	35.98
		I-2860182-1.01.25	101-42130-42810	UTILITIES-TRA MINNESOTA AND 16 AVE	205672	12.85
		I-2860183-9.01.25	101-42130-42810	UTILITIES-TRA MINNESOTA AND 18 AVE	205672	12.85

PACKET : 07238 07239 07240 07241
VENDOR SET: Mult
FUND : 101 GENERAL
DEPARTMENT: 2130 TRAFFIC DEPARTMENT BANK: Multi
BUDGET TO USE: CB-CURRENT BUDGET

VENDOR	NAME	ITEM #	G/L ACCOUNT NAME	DESCRIPTION	CHECK#	AMOUNT
01-01830	NORTHWESTERN ENERGY continued					
		I-2942176-5.02.25	101-42130-42810	UTILITIES-TRA 809 E 1ST AVE	205672	13.71
		I-2943370-3.01.25	101-42130-42810	UTILITIES-TRA SPRUCE AND CABELA DR TRAFFIC	205672	79.56
		I-2955717-0.01.25	101-42130-42835	UTILITIES-STR 500 N MAIN LOT PARKING	205672	28.49
		I-2980768-2.01.25	101-42130-42810	UTILITIES-TRA 121 W HAVENS	205672	150.47
		I-3480194-4.01.25	101-42130-42810	UTILITIES-TRA 111 W 7TH PWSP SIGNAL	205672	194.89
		I-3480195-1.01.25	101-42130-42810	UTILITIES-TRA 112 W 2ND PWSP SIGNAL	205672	156.98
		I-3480197-7.01.25	101-42130-42810	UTILITIES-TRA 111 W 5TH PWSP SIGNAL	205672	97.98
		I-3621835-2.01.25	101-42130-42810	UTILITIES-TRA S RAMPS I 90 SIGNAL LIGHTS	205672	234.50
		I-3701975-9.01.25	101-42130-42835	UTILITIES-STR N RAMPS I 90 STREET LIGHT	205672	720.26
		I-3880132-0.01.25	101-42130-42810	UTILITIES-TRA 1808 N MINNESOTA AVE SGNL	205672	151.10
01-02537	SHERWIN-WILLIAMS COMPAN					
		I-4594-1	101-42130-42545	PAINT HOSE	205702	188.97
01-02679	MENARD'S INC					
		I-82531A	101-42130-42600	SUPPLIES CLOTHS,DAWN,GLASS,TOILET CLNRS	205658	36.87
01-02790	SUN GOLD SPORTS LLC					
		I-30915	101-42130-42600	SUPPLIES HARVEY LOGOD HATS	205713	40.00
01-02880	THUNE TRUE VALUE & APPL					
		I-A587670	101-42130-42540	SIGNS NUTS,BOLTS	205719	2.85
		I-B300027	101-42130-42540	SIGNS NUTS,BOLTS,CAULK TUBE	205719	10.68
01-04352	UPS STORE #4227					
		I-01302025	101-42130-42500	REPAIRS SHIPPING FUEL PUMP	205724	14.18
01-06045	TRAFFIC CONTROL CORPORA					
		I-156310	101-42130-42530	TRAFFIC LIGHT DISPLAY CABINET	205721	1,300.00
01-09349	HOWES OIL CO					
		I-352795	101-42130-42610	GAS, OIL, TIR UNLEADED GAS	205635	296.49
01-09703	AMAZON CAPITAL SERVICES					
		I-1793-YF4T-FDY9	101-42130-42640	UNIFORMS HARVEY BOOTS	205568	100.00
		I-1Y9N-H733-J4G6	101-42130-42535	LIGHT MAINTEN BARN LIGHT	205568	35.99

DEPARTMENT 2130 TRAFFIC DEPARTMENT TOTAL: 32,842.85

PACKET : 07238 07239 07240 07241
VENDOR SET: Mult
FUND : 101 GENERAL
DEPARTMENT: 2200 FIRE DEPARTMENT BANK: Multi
BUDGET TO USE: CB-CURRENT BUDGET

VENDOR	NAME	ITEM #	G/L ACCOUNT NAME		DESCRIPTION	CHECK#	AMOUNT
01-00140	AL'S ENGRAVING						
		I-18958	101-42200-42600	SUPPLIES	OFFICE SIGNS	205566	16.95
01-01199	STURDEVANTS AUTO VALUE						
		I-815051100	101-42200-42600	SUPPLIES	RELAY SWITCH	205710	35.98
01-01590	MCLEOD'S PRINTING						
		I-81790	101-42200-42600	SUPPLIES	BUSINESS CARDS	205656	34.98
01-01830	NORTHWESTERN ENERGY						
		I-2583799-8.01.25	101-42200-42810	UTILITIES	201 W 1ST AVE FIRE	205672	4,521.70
		I-3566523-1.01.25	101-42200-42810	UTILITIES	5971 AIRPORT RD BLDG 21	205672	223.11
01-02679	MENARD'S INC						
		I-82723	101-42200-42600	SUPPLIES	TROP PASS	205658	59.88
01-03466	ESO SOLUTIONS INC						
		I-ESO-160082	101-42200-42693	COMPUTER SOFT	FIRE INSPECTION SOFTWARE	205624	10,850.00
01-04905	MIKE BARTELL						
		I-02102025	101-42200-42640	UNIFORMS	RADIO STRAP REIMBURSED	205578	167.92
01-04906	7K TIMBER CO LLC						
		I-21	101-42200-43200	BUILDINGS	WALNUT BOARDS FOR TABLE	205561	1,902.58
01-06750	MITCHELL TELECOM						
		I-11078831	101-42200-42800	TELEPHONE	ACCT #00223662-2	205668	2.68
01-07095	TOM SCHAFFNER						
		I-02102025	101-42200-42640	UNIFORMS	SHOES,FLASHLIGHT,BOOTS REIMB	205698	300.00
01-08594	MAKE IT MINE DESIGNS						
		I-38838	101-42200-42640	UNIFORMS	EMBROIDERY FEE	205655	14.00
		I-38894	101-42200-42640	UNIFORMS	SHIRTS,EMBROIDERY	205655	74.55
01-09349	HOWES OIL CO						
		I-352795	101-42200-42610	GAS & OIL	UNLEADED GAS	205635	248.99
01-09991	DAKOTA PRO STRIPING & I						
		I-4798	101-42200-42600	SUPPLIES	TOTES OF ECO THAW SALT	205606	252.38
					DEPARTMENT 2200 FIRE DEPARTMENT	TOTAL:	18,705.70

PACKET : 07238 07239 07240 07241
VENDOR SET: Mult
FUND : 101 GENERAL
DEPARTMENT: 3100 STREET DEPARTMENT BANK: Multi
BUDGET TO USE: CB-CURRENT BUDGET

VENDOR	NAME	ITEM #	G/L ACCOUNT NAME	DESCRIPTION	CHECK#	AMOUNT
01-00210	BAILEY METAL FABRICATOR					
		I-64231	101-43100-42600	SUPPLIES FLAT EXPANDED METAL	205576	92.48
	PROJ: L25-42600 127			SUPPLIES MATERIALS		
01-00532	A-OX WELDING SUPPLY CO					
		I-0001416220	101-43100-42600	SUPPLIES ARGON	205563	162.96
01-00712	NAPA CENTRAL					
		I-810750	101-43100-42500	REPAIRS HYD HOSE FITTINGS	205671	490.56
	PROJ: L73-42500 905			REPAIR MAINTENANCE		
		I-810839	101-43100-42600	SUPPLIES FUEL FILTER	205671	24.79
	PROJ: L25-42600 127			SUPPLIES MATERIALS		
		I-811006	101-43100-42600	SUPPLIES COIL ON PLUG COIL	205671	205.96
	PROJ: L70-42600 902			SUPPLIES MATERIALS		
01-00917	DAKOTA FLUID POWER INC					
		I-7296743	101-43100-42600	SUPPLIES FEMALE,MALE COUPLERS	205605	207.92
	PROJ: L06-42600 105			SUPPLIES MATERIALS		
		I-7296743	101-43100-42600	SUPPLIES FEMALE,MALE COUPLERS	205605	207.92
	PROJ: L21-42600 121			SUPPLIES MATERIALS		
		I-7296743	101-43100-42600	SUPPLIES FEMALE,MALE COUPLERS	205605	207.93
	PROJ: L47-42600 148			SUPPLIES MATERIALS		
		I-7299409	101-43100-42500	REPAIRS GATES HOSE ASSEMBLY	205605	168.20
	PROJ: L10-42500 106			REPAIR MAINTENANCE		
01-01117	FLEETPRIDE					
		I-123118262	101-43100-42600	SUPPLIES TENDER KIT	205627	35.04
	PROJ: L73-42600 905			SUPPLIES MATERIALS		
		I-123326928	101-43100-42600	SUPPLIES RUBBER TIE	205627	57.80
01-01199	STURDEVANTS AUTO VALUE					
		I-815050821	101-43100-42600	SUPPLIES HYDRAULIC,WINDSHIELD WASHER,FL	205710	128.69
	PROJ: L39-42600 140			SUPPLIES MATERIALS		
		I-815050821	101-43100-42600	SUPPLIES HYDRAULIC,WINDSHIELD WASHER,FL	205710	70.87
	PROJ: L57-42600 161			SUPPLIES MATERIALS		
		I-815050821	101-43100-42600	SUPPLIES HYDRAULIC,WINDSHIELD WASHER,FL	205710	28.89
	PROJ: L23-42600 124			SUPPLIES MATERIALS		
		I-815050821	101-43100-42600	SUPPLIES HYDRAULIC,WINDSHIELD WASHER,FL	205710	11.73
	PROJ: L06-42600 105			SUPPLIES MATERIALS		
		I-815050821	101-43100-42600	SUPPLIES HYDRAULIC,WINDSHIELD WASHER,FL	205710	128.69
	PROJ: L39-42600 140			SUPPLIES MATERIALS		
		I-815050821	101-43100-42600	SUPPLIES HYDRAULIC,WINDSHIELD WASHER,FL	205710	215.71
	PROJ: L05-42600 104			SUPPLIES MATERIALS		
		I-815050821	101-43100-42600	SUPPLIES HYDRAULIC,WINDSHIELD WASHER,FL	205710	404.93
	PROJ: L10-42600 106			SUPPLIES MATERIALS		
		I-815050821	101-43100-42600	SUPPLIES HYDRAULIC,WINDSHIELD WASHER,FL	205710	323.15
	PROJ: L39-42600 140			SUPPLIES MATERIALS		
		I-815050821	101-43100-42600	SUPPLIES HYDRAULIC,WINDSHIELD WASHER,FL	205710	143.94
	PROJ: L25-42600 127			SUPPLIES MATERIALS		

PACKET : 07238 07239 07240 07241
VENDOR SET: Mult
FUND : 101 GENERAL
DEPARTMENT: 3100 STREET DEPARTMENT BANK: Multi
BUDGET TO USE: CB-CURRENT BUDGET

VENDOR	NAME	ITEM #	G/L ACCOUNT NAME		DESCRIPTION	CHECK#	AMOUNT
01-01199	STURDEVANTS AUTO VALUE continued						
		I-815050821	101-43100-42600	SUPPLIES	HYDRAULIC,WINDSHIELD WASHER,FL	205710	244.72
	PROJ: L12-42600	109		SUPPLIES MATERIALS			
		I-815050821	101-43100-42600	SUPPLIES	HYDRAULIC,WINDSHIELD WASHER,FL	205710	218.70
	PROJ: L59-42600	163		SUPPLIES MATERIALS			
		I-815050821	101-43100-42600	SUPPLIES	HYDRAULIC,WINDSHIELD WASHER,FL	205710	239.28
	PROJ: L58-42600	162		SUPPLIES MATERIALS			
		I-815050821	101-43100-42600	SUPPLIES	HYDRAULIC,WINDSHIELD WASHER,FL	205710	34.36
	PROJ: L39-42600	140		SUPPLIES MATERIALS			
		I-815051210	101-43100-42600	SUPPLIES	BATTERY,OIL,AIR,FUEL FILTERS	205710	464.28
	PROJ: L25-42600	127		SUPPLIES MATERIALS			
		I-815051210	101-43100-42600	SUPPLIES	BATTERY,OIL,AIR,FUEL FILTERS	205710	121.98
	PROJ: L68-42600	521		SUPPLIES MATERIALS			
		I-815051210	101-43100-42600	SUPPLIES	BATTERY,OIL,AIR,FUEL FILTERS	205710	432.57
	PROJ: L24-42600	125		SUPPLIES MATERIALS			
		I-815051210	101-43100-42600	SUPPLIES	BATTERY,OIL,AIR,FUEL FILTERS	205710	16.82
	PROJ: L47-42600	148		SUPPLIES MATERIALS			
		I-815051210	101-43100-42600	SUPPLIES	BATTERY,OIL,AIR,FUEL FILTERS	205710	33.66
	PROJ: L18-42600	118		SUPPLIES MATERIALS			
01-02418	SANITATION PRODUCTS INC						
		I-91845	101-43100-42600	SUPPLIES	UPPER & LOWER FAN HOUSING,LINE	205695	3,060.08
	PROJ: L10-42600	106		SUPPLIES MATERIALS			
01-02527	TRANSOURCE						
		I-41P57847	101-43100-42600	SUPPLIES	RADIATOR	205722	4,841.92
	PROJ: L21-42600	121		SUPPLIES MATERIALS			
		I-41P58014	101-43100-42600	SUPPLIES	VALVE	205722	139.25
	PROJ: L06-42600	105		SUPPLIES MATERIALS			
01-02679	MENARD'S INC						
		I-82812	101-43100-42600	SUPPLIES	NOZZLE,WASHERS,O-RINGS,ADHESV	205658	100.39
	PROJ: L10-42600	106		SUPPLIES MATERIALS			
01-06750	MITCHELL TELECOM						
		I-11078831	101-43100-42800	UTILITIES	ACCT #00223662-2	205668	2.42
01-09349	HOWES OIL CO						
		I-352795	101-43100-42610	GAS	UNLEADED GAS	205635	562.95
01-09509	INNOVATIVE OFFICE SOLUT						
		I-IN4754327	101-43100-42600	SUPPLIES	PAPER,RULED NOTE PAD	205640	40.39
01-09512	ENVIRONMENTAL EQUIPMENT						
		I-24617	101-43100-42600	SUPPLIES	DUO SKID,CURTAIN SET,SWITCH	205623	2,531.99
	PROJ: L25-42600	127		SUPPLIES MATERIALS			
01-09594	TRAVIS HOHRMAN						
		I-02062025	101-43100-42650	UNIFORMS	COMPST TOE BOOTS REIMBURSED	205634	124.95

PACKET : 07238 07239 07240 07241
VENDOR SET: Mult
FUND : 101 GENERAL
DEPARTMENT: 3100 STREET DEPARTMENT BANK: Multi
BUDGET TO USE: CB-CURRENT BUDGET

VENDOR	NAME	ITEM #	G/L ACCOUNT NAME		DESCRIPTION	CHECK#	AMOUNT
01-09597	SD LOCAL TRANSPORTATION						
		I-15168609	101-43100-42700	TRAVEL, CONF,	REGISTRATION SIX ATTENDEES	205701	875.00
01-09682	DIESEL LAPTOPS LLC						
		I-INV156108	101-43100-42600	SUPPLIES	TRUCK/OFF HWY RENEWAL	205617	1,106.25
01-09703	AMAZON CAPITAL SERVICES						
		I-1LGG-Y99D-9J97	101-43100-42600	SUPPLIES	WHEEL REPLACEMENT	205568	107.98
	PROJ: L10-42600	106		SUPPLIES MATERIALS			
		I-1M7R-DRV3-9LJG	101-43100-42500	REPAIRS	INTERNAL BRAKE SOLENOID	205568	219.94
01-10414	MIDWAY SERVICE dba VOLL						
		I-77177	101-43100-42600	SUPPLIES	DIESEL EXHAUST FLUID	205661	227.05
01-10554	MIDWEST OIL COMPANY						
		I-1033352	101-43100-42600	SUPPLIES	KLEEN & KLEAR DRUMS	205662	89.29
				DEPARTMENT 3100	STREET DEPARTMENT	TOTAL:	19,154.38

PACKET : 07238 07239 07240 07241
VENDOR SET: Mult
FUND : 101 GENERAL
DEPARTMENT: 3110 PUBLIC WORKS ADMIN BANK: Multi
BUDGET TO USE: CB-CURRENT BUDGET

VENDOR	NAME	ITEM #	G/L ACCOUNT NAME	DESCRIPTION		CHECK#	AMOUNT
01-00059	JOELLE DAMMANN						
		I-02062025	101-43110-42700	TRAVEL CONF D	PIERRE APWA CONF-MEALS	205609	28.00
01-00436	CHS FARMERS ALLIANCE						
		I-IZ8627	101-43110-42500	REPAIRS	TIRE REPAIR	205592	18.83
01-01199	STURDEVANTS AUTO VALUE						
		I-815050314	101-43110-42500	REPAIRS	EXHAUST MANIFOLD	205710	83.97
01-01518	VERIZON WIRELESS						
		I-6104757903	101-43110-42800	UTILITIES	ACCT #886931646-00001	205727	80.02
01-02170	DAVISON COUNTY REGISTER						
		I-02042025	101-43110-42200	PROFESSIONAL	1809 CHARLES EASEMENT RERECORD	205612	30.00
01-02880	THUNE TRUE VALUE & APPL						
		I-A587529	101-43110-42600	SUPPLIES	WINDSHIELD FLUID	205719	5.49
01-03114	SUBWAY						
		I-1/A-699737	101-43110-42750	PLANNING COMM	02.10.2025 PLANNING COMM MEALS	205712	53.94
01-03678	INTERSTATE OFFICE PRODU						
		I-01EF5216	101-43110-42600	SUPPLIES	INK PAD	205642	7.05
		I-01EF5316	101-43110-42600	SUPPLIES	CLIPS,CLIPBOARDS	205642	68.29
		I-01EF5603	101-43110-42600	SUPPLIES	PENS	205642	16.44
		I-01EF5941	101-43110-42600	SUPPLIES	FOLDERS	205642	69.96
01-06750	MITCHELL TELECOM						
		I-11078831	101-43110-42800	UTILITIES	ACCT #00223662-2	205668	4.28
		I-11081327	101-43110-42916	NUISANCE ABAT	ACCT #00019259-0	205668	5.31
01-06997	TERRY JOHNSON						
		I-02072025	101-43110-42700	TRAVEL CONF D	PIERRE APWA CONF MEALS	205645	28.00
01-09349	HOWES OIL CO						
		I-352795	101-43110-42610	GAS	UNLEADED GAS	205635	682.19

DEPARTMENT 3110 PUBLIC WORKS ADMIN TOTAL: 1,181.77

PACKET : 07238 07239 07240 07241
VENDOR SET: Mult
FUND : 101 GENERAL
DEPARTMENT: 3120 STREET & SIDEWALK CONST BANK: Multi
BUDGET TO USE: CB-CURRENT BUDGET

VENDOR	NAME	ITEM #	G/L ACCOUNT NAME	DESCRIPTION	CHECK#	AMOUNT
01-00680	RUNGE ENTERPRISES INC					
		I-62678	101-43120-43300	STREET OVERLA CLEARING & PILING TREES HWY 37	205689	6,000.00
01-06294	BROSZ ENGINEERING INC					
		I-2023-23 P.E. #8	101-43120-43312	WEST END BRID 2023-23 P.E. #8	205582	890.00
				DEPARTMENT 3120 STREET & SIDEWALK CONST TOTAL:		6,890.00

PACKET : 07238 07239 07240 07241
VENDOR SET: Mult
FUND : 101 GENERAL
DEPARTMENT: 3130 SNOW REMOVAL BANK: Multi
BUDGET TO USE: CB-CURRENT BUDGET

VENDOR	NAME	ITEM #	G/L ACCOUNT NAME	DESCRIPTION	CHECK#	AMOUNT
01-10619	DMC WEAR PARTS LLC					
		I-4553	101-43130-42600	SUPPLIES & MA LOADER PLOW BLADES	205618	2,489.24
				DEPARTMENT 3130 SNOW REMOVAL	TOTAL:	2,489.24

PACKET : 07238 07239 07240 07241
VENDOR SET: Mult
FUND : 101 GENERAL
DEPARTMENT: 3700 CEMETERY BANK: Multi
BUDGET TO USE: CB-CURRENT BUDGET

VENDOR	NAME	ITEM #	G/L ACCOUNT NAME	DESCRIPTION	CHECK#	AMOUNT
01-00424	RUNNINGS SUPPLY INC					
		I-2001628	101-43700-42600	SUPPLIES & MA IRON FOR WORKMAN LIGHT COVERS	205690	78.65
		I-2004814	101-43700-42603	WEED EATERS S PRUNING SAW	205690	279.00
01-00436	CHS FARMERS ALLIANCE					
		I-IG1391	101-43700-42610	GAS & FUEL GOLF MAINT RUBY FIELDMASTER	205592	44.91
		I-IG1392	101-43700-42610	GAS & FUEL GOLF MAINT UNLEADED GAS	205592	119.13
		I-IG3086	101-43700-42610	GAS & FUEL CEMETERY LP GAS HEAT SD	205592	119.17
01-01404	MITCHELL IRON & SUPPLY					
		I-84792	101-43700-42600	SUPPLIES & MA PILLOW BLOCK	205666	282.26
01-01518	VERIZON WIRELESS					
		I-6104757903	101-43700-42800	UTILITIES ACCT #886931646-00001	205727	73.32
01-08281	VESTIS					
		I-6380259823	101-43700-42600	SUPPLIES & MA MAT CLEANING	205729	33.26
				DEPARTMENT 3700 CEMETERY	TOTAL:	1,029.70

PACKET : 07238 07239 07240 07241
VENDOR SET: Mult
FUND : 101 GENERAL
DEPARTMENT: 4120 ANIMAL CONTROL BANK: Multi
BUDGET TO USE: CB-CURRENT BUDGET

VENDOR	NAME	ITEM #	G/L ACCOUNT NAME	DESCRIPTION	CHECK#	AMOUNT
01-01210	LAKEVIEW VETERINARY CLI					
		I-336714	101-44120-42900	IMPOUNDING DO JAN 2025 MANAGEMENT FEE	205650	991.31
01-01830	NORTHWESTERN ENERGY					
		I-2719777-1.01.25	101-44120-42800	UTILITIES-POU 2020 W HAVENS NEW BLDG	205672	191.81
01-02017	DAVISON RURAL WATER SYS					
		I-4837.02.25	101-44120-42800	UTILITIES-POU JAN 2025 WATER USAGE	205614	60.30
01-09865	MITCHELL ANIMAL RESCUE					
		I-02012025	101-44120-42900	IMPOUNDING DO FEB 2025 MANAGEMENT FEE	205664	350.00
				DEPARTMENT 4120 ANIMAL CONTROL	TOTAL:	1,593.42

PACKET : 07238 07239 07240 07241
VENDOR SET: Mult
FUND : 101 GENERAL
DEPARTMENT: 5000 CULTURE & RECREATION BANK: Multi
BUDGET TO USE: CB-CURRENT BUDGET

VENDOR	NAME	ITEM #	G/L ACCOUNT NAME		DESCRIPTION	CHECK#	AMOUNT
01-09219	CASA - FIRST CIRCUIT						
		I-2767	101-45000-42925	CASA	2025 1ST QTR ALLOCATION	205587	1,250.00
				DEPARTMENT 5000	CULTURE & RECREATION	TOTAL:	1,250.00

PACKET : 07238 07239 07240 07241
VENDOR SET: Mult
FUND : 101 GENERAL
DEPARTMENT: 5500 LIBRARY BANK: Multi
BUDGET TO USE: CB-CURRENT BUDGET

VENDOR	NAME	ITEM #	G/L ACCOUNT NAME		DESCRIPTION	CHECK#	AMOUNT
01-00553	DEMCO INC						
		I-7592842	101-45500-42600	SUPPLIES & MA	PROCESSING LABELS,BOOK TAPE	205615	223.25
01-01015	INGRAM LIBRARY SERVICES						
		I-86155350	101-45500-43420	BOOKS	BOOKS	205639	256.72
		I-86191711	101-45500-43420	BOOKS	BOOKS	205639	71.16
		I-86288001	101-45500-43420	BOOKS	BOOKS	205639	318.49
		I-86319092	101-45500-43420	BOOKS	BOOKS	205639	940.51
		I-86319093	101-45500-43420	BOOKS	BOOKS	205639	129.50
		I-86348206	101-45500-43420	BOOKS	BOOKS	205639	67.48
		I-86386090	101-45500-43420	BOOKS	BOOKS	205639	289.14
		I-86426499	101-45500-43420	BOOKS	BOOKS	205639	137.96
01-01830	NORTHWESTERN ENERGY						
		I-2585828-3.01.25	101-45500-42800	UTILITIES	221 N DUFF ST	205672	3,756.27
01-02679	MENARD'S INC						
		I-82823	101-45500-42600	SUPPLIES & MA	C TO USB CABLE	205658	3.99
01-05088	BLACKSTONE PUBLISHING						
		I-2183968	101-45500-43421	AUDIO-VISUAL	AUDIOBOOKS	205581	100.77
01-06026	CENTER POINT LARGE PRIN						
		I-2146105	101-45500-43420	BOOKS	LARGE PRINT BOOKS	205588	97.08
01-06583	BAKER & TAYLOR						
		I-2038818205	101-45500-43420	BOOKS	CHILDREN'S BOOKS	205577	127.55
		I-2038848846	101-45500-43420	BOOKS	CHILDREN'S BOOKS	205577	71.42
01-06750	MITCHELL TELECOM						
		I-11078831	101-45500-42800	UTILITIES	ACCT #00223662-2	205668	1.01
		I-11080481	101-45500-42800	UTILITIES	ACCT #00217267-0	205668	72.95
01-08281	VESTIS						
		I-6380259835	101-45500-42600	SUPPLIES & MA	MAT CLEANING	205729	61.48
01-09703	AMAZON CAPITAL SERVICES						
		I-1794-NLXQ-N34H	101-45500-43420	BOOKS	BOOK	205568	13.75
		I-1QM4-7PPH-1GT9	101-45500-42600	SUPPLIES & MA	BLACK WRAPPING PAPER	205568	39.99
01-10434	EAST WEST BOOKS						
		I-ARU0380051	101-45500-43420	BOOKS	CHILDREN'S BOOKS	205620	237.89

DEPARTMENT 5500 LIBRARY TOTAL: 7,018.36

FUND 101 GENERAL TOTAL: 132,182.32

PACKET : 07238 07239 07240 07241
VENDOR SET: Mult
FUND : 201 PARK FUND
DEPARTMENT: 5110 RECREATION & AQUATICS BANK: Multi
BUDGET TO USE: CB-CURRENT BUDGET

VENDOR	NAME	ITEM #	G/L ACCOUNT NAME	DESCRIPTION	CHECK#	AMOUNT
01-00356	QUALIFIED PRESORT SERVI					
		I-2279-460	201-45110-42600	SUPPLIES & MA POSTAGE 01.16-31.2025	205687	51.10
01-06750	MITCHELL TELECOM					
		I-11078831	201-45110-42800	UTILITIES ACCT #00223662-2	205668	1.08
01-09845	BRUCE KLEINSASSER					
		I-2025 HENKEL	201-45110-42200	PROFESSIONAL HENKEL REGISTRATION	205648	200.00
	PROJ: J50-PROF FEE	OUTDOOR AQUATIC CENTER		CONCESSION CERTIFICATION		
				DEPARTMENT 5110 RECREATION & AQUATICS TOTAL:		252.18

PACKET : 07238 07239 07240 07241
VENDOR SET: Mult
FUND : 201 PARK FUND
DEPARTMENT: 5140 RECREATION CENTER BANK: Multi
BUDGET TO USE: CB-CURRENT BUDGET

VENDOR	NAME	ITEM #	G/L ACCOUNT NAME	DESCRIPTION	CHECK#	AMOUNT
01-00752	MITCHELL PLUMBING & HEA					
		I-908336	201-45140-42600	SUPPLIES & MA STRUT CLAMP	205667	26.32
	PROJ: J06-SM-GENER	REC CTR-GENERAL BLDG		SUPPLIES/MATERIAL-GENERAL		
01-00908	PATZER WOODWORKING INC.					
		I-25041	201-45140-43300	CAPITAL IMPRO REC CENTER FRONT DESK,COUNTERS	205683	20,143.20
01-01145	CLIMATE SYSTEMS INC					
		I-19311	201-45140-42500	REPAIR & MAIN REPLACE MAIN EEV & SUB UNIT 2	205593	247.50
	PROJ: J06-RM-HVAC	REC CTR-GENERAL BLDG		REPAIR/MAINT-HVAC		
01-01830	NORTHWESTERN ENERGY					
		I-2580493-1.01.25	201-45140-42800	UTILITIES 1300 N MAIN	205672	3,426.44
	PROJ: J09-ELE/GAS	REC CTR UTILITIES		UTILITIES-ELECTRIC/GAS		
01-02560	PEPSI COLA COMPANY					
		I-97812093	201-45140-42601	CONCESSION SU POP,BODY ARMOUR,GATORADES	205684	403.58
	PROJ: J05-CONC SUP	REC CTR CONCESSIONS		CONCESSION SUPPLY		
01-02567	S & M PRINTING INC					
		I-83762	201-45140-42600	SUPPLIES & MA GLOSS COVERS	205691	700.00
	PROJ: J06-SM-GENER	REC CTR-GENERAL BLDG		SUPPLIES/MATERIAL-GENERAL		
		I-83824	201-45140-42600	SUPPLIES & MA FLYERS	205691	36.50
	PROJ: J06-SM-GENER	REC CTR-GENERAL BLDG		SUPPLIES/MATERIAL-GENERAL		
01-02679	MENARD'S INC					
		I-82438	201-45140-42600	SUPPLIES & MA OUTLET PLATE,WIRE,COM DUPLEX	205658	25.85
	PROJ: J06-SM-ELEC	REC CTR-GENERAL BLDG		SUPPLIES/MATERIAL-ELECTRICAL		
		I-82523	201-45140-42600	SUPPLIES & MA PRM CRPT,DRY LUB,FELT	205658	22.55
	PROJ: J06-SM-GENER	REC CTR-GENERAL BLDG		SUPPLIES/MATERIAL-GENERAL		
		I-82644	201-45140-42600	SUPPLIES & MA UTILITY BLADES,PRIMER,CLEANER	205658	50.39
	PROJ: J06-SM-GENER	REC CTR-GENERAL BLDG		SUPPLIES/MATERIAL-GENERAL		
		I-82685	201-45140-42500	REPAIR & MAIN CO/GAS ALARM PLUG IN	205658	34.67
	PROJ: J06-RM-EQUIP	REC CTR-GENERAL BLDG		REPAIR/MAINT-EQUIPMENT		
		I-82785	201-45140-42600	SUPPLIES & MA MINA STACK CHAIRS	205658	399.80
	PROJ: J02-SM-EQUIP	INDOOR AQUATIC CTR		SUPPLIES/MATERIAL-EQUIPMENT		
		I-82816	201-45140-42600	SUPPLIES & MA ADHESIVE,BROOM	205658	40.36
	PROJ: J06-SM-GENER	REC CTR-GENERAL BLDG		SUPPLIES/MATERIAL-GENERAL		
01-02880	THUNE TRUE VALUE & APPL					
		I-A587510	201-45140-42600	SUPPLIES & MA NUTS,BOLTS,SOCKET	205719	9.64
	PROJ: J06-SM-GENER	REC CTR-GENERAL BLDG		SUPPLIES/MATERIAL-GENERAL		
		I-A587584	201-45140-42600	SUPPLIES & MA COMBWRENCH	205719	20.99
	PROJ: J06-SM-EQUIP	REC CTR-GENERAL BLDG		SUPPLIES/MATERIAL-EQUIPMENT		
		I-A587649	201-45140-42600	SUPPLIES & MA WING CONNECTOR,HEADLAMP	205719	15.49
	PROJ: J06-SM-GENER	REC CTR-GENERAL BLDG		SUPPLIES/MATERIAL-GENERAL		
		I-A588073	201-45140-42600	SUPPLIES & MA BLADE,BARREL BOLT	205719	28.48
	PROJ: J06-SM-GENER	REC CTR-GENERAL BLDG		SUPPLIES/MATERIAL-GENERAL		
		I-A588409	201-45140-42600	SUPPLIES & MA GOO GONE,GOOF REMOVER	205719	30.77
	PROJ: J06-SM-GENER	REC CTR-GENERAL BLDG		SUPPLIES/MATERIAL-GENERAL		

PACKET : 07238 07239 07240 07241
VENDOR SET: Mult
FUND : 201 PARK FUND
DEPARTMENT: 5140 RECREATION CENTER BANK: Multi
BUDGET TO USE: CB-CURRENT BUDGET

VENDOR	NAME	ITEM #	G/L ACCOUNT NAME	DESCRIPTION	CHECK#	AMOUNT
01-03267	WALMART/CAPITAL ONE					
		I-8775.01312025	201-45140-42600	SUPPLIES & MA BATH CUPS	205730	22.58
	PROJ: J06-SM-GENER	REC CTR-GENERAL BLDG		SUPPLIES/MATERIAL-GENERAL		
01-04950	MIDCONTINENT COMMUNICAT					
		I-BIL-548360	201-45140-42300	PUBLISHING ADVERTISING	205660	350.00
	PROJ: J08-MIDCO	REC CTR PUBLISHING		PUBLISHING-MIDCO		
		I-BIL-550954	201-45140-42300	PUBLISHING ADVERTISING	205660	150.00
	PROJ: J08-MIDCO	REC CTR PUBLISHING		PUBLISHING-MIDCO		
		I-BIL-550955	201-45140-42300	PUBLISHING ADVERTISING	205660	300.00
	PROJ: J08-MIDCO	REC CTR PUBLISHING		PUBLISHING-MIDCO		
		I-BIL-552162	201-45140-42300	PUBLISHING ADVERTISING	205660	237.00
	PROJ: J08-MIDCO	REC CTR PUBLISHING		PUBLISHING-MIDCO		
		I-BIL-552372	201-45140-42300	PUBLISHING ADVERTISING	205660	1,349.00
	PROJ: J08-MIDCO	REC CTR PUBLISHING		PUBLISHING-MIDCO		
		I-BIL-552683	201-45140-42300	PUBLISHING ADVERTISING	205660	55.00
	PROJ: J08-MIDCO	REC CTR PUBLISHING		PUBLISHING-MIDCO		
		I-BIL-553234	201-45140-42300	PUBLISHING ADVERTISING	205660	200.00
	PROJ: J08-MIDCO	REC CTR PUBLISHING		PUBLISHING-MIDCO		
01-07716	SAGA COMMUNICATIONS OF					
		I-MC-12501109624	201-45140-42300	PUBLISHING ADVERTISING	205694	615.00
	PROJ: J08-KMIT	REC CTR PUBLISHING		PUBLISHING-KMIT		
01-09143	ICAN INC					
		I-122937	201-45140-42300	PUBLISHING ADVERTISING	205637	750.00
	PROJ: J08-ICAN	REC CTR PUBLISHING		PUBLISHING-ICAN		
01-09633	STAPLES					
		I-6023530167	201-45140-42600	SUPPLIES & MA TERRY BAR TOWELS	205707	85.24
	PROJ: J06-SM-JANIT	REC CTR-GENERAL BLDG		SUPPLIES/MATERIAL-JANITORIAL		
		I-6023720396	201-45140-42600	SUPPLIES & MA POSTERBOARD,PENCILS	205707	15.08
	PROJ: J06-SM-OFFIC	REC CTR-GENERAL BLDG		SUPPLIES/MATERIAL-OFFICE		
		I-6023788040	201-45140-42600	SUPPLIES & MA HAND SANITIZER,LINERS,TOWELS	205707	468.33
	PROJ: J06-SM-JANIT	REC CTR-GENERAL BLDG		SUPPLIES/MATERIAL-JANITORIAL		
		I-6023788041	201-45140-42600	SUPPLIES & MA FOAM SKIN CLEANSER	205707	98.52
		I-6023856192	201-45140-42600	SUPPLIES & MA MICROFIBER CLOTHS,HAND WASH	205707	114.96
	PROJ: J06-SM-JANIT	REC CTR-GENERAL BLDG		SUPPLIES/MATERIAL-JANITORIAL		
01-09703	AMAZON CAPITAL SERVICES					
		I-1WJ4-QGQ4-WWRL	201-45140-42601	CONCESSION SU AIRHEAD CANDY	205568	31.96
	PROJ: J05-CONC SUP	REC CTR CONCESSIONS		CONCESSION SUPPLY		
01-09913	AVERA QUEEN OF PEACE NU					
		I-01312025	201-45140-42600	SUPPLIES & MA 1 INITIAL,FOLLOWUP ASSESSEMENT	205574	234.00
	PROJ: J06-SM-GENER	REC CTR-GENERAL BLDG		SUPPLIES/MATERIAL-GENERAL		

DEPARTMENT 5140 RECREATION CENTER TOTAL: 30,739.20

PACKET : 07238 07239 07240 07241
VENDOR SET: Mult
FUND : 201 PARK FUND
DEPARTMENT: 5160 SPORTS COMPLEXES BANK: Multi
BUDGET TO USE: CB-CURRENT BUDGET

VENDOR	NAME	ITEM #	G/L ACCOUNT NAME	DESCRIPTION	CHECK#	AMOUNT
01-00008	ELFSTRAND'S ACE HARDWAR					
		I-4341/1	201-45160-42600	SUPPLIES & MA MISC FASTENER	205621	1.00
	PROJ: H13-42600	ARENA-SOUTH RINK		SUPPLIES-MAINTENANCE		
		I-4343/1	201-45160-42603	SMALL EQUIPME C-E SHREDDER,VACUUM	205621	339.99
	PROJ: H01-42603	SPORTS COMPLEX EQUIPMENT		SMALL EQUIPMENT		
		I-4395/1	201-45160-42600	SUPPLIES & MA DRAIN PAN,STRAP WRENCH,FSTNRS	205621	29.96
	PROJ: H13-42600	ARENA-SOUTH RINK		SUPPLIES-MAINTENANCE		
		I-4411/1	201-45160-42600	SUPPLIES & MA BALL VALVE	205621	23.58
	PROJ: H13-42600	ARENA-SOUTH RINK		SUPPLIES-MAINTENANCE		
01-00356	QUALIFIED PRESORT SERVI					
		I-2279-460	201-45160-42600	SUPPLIES & MA POSTAGE 01.16-31.2025	205687	21.90
01-00436	CHS FARMERS ALLIANCE					
		I-IG3328	201-45160-42610	GAS & FUEL HOCKEY PROPANE BOTTLE FILL	205592	130.00
	PROJ: H01-42610	SPORTS COMPLEX EQUIPMENT		GAS-FUEL		
		I-IG3430	201-45160-42610	GAS & FUEL HOCKEY PROPANE BOTTLE FILL	205592	78.00
	PROJ: H01-42610	SPORTS COMPLEX EQUIPMENT		GAS-FUEL		
		I-IG3509	201-45160-42610	GAS & FUEL HOCKEY PROPANE BOTTLE FILL	205592	104.00
	PROJ: H01-42610	SPORTS COMPLEX EQUIPMENT		GAS-FUEL		
01-00712	NAPA CENTRAL					
		C-810638	201-45160-42500	REPAIR & MAIN RETURNED PLIERS	205671	48.99-
	PROJ: H01-42500	SPORTS COMPLEX EQUIPMENT		REPAIR/MAINTENANCE		
		I-810631	201-45160-42500	REPAIR & MAIN PLIERS,BRAKE CLEANER	205671	110.91
	PROJ: H01-42500	SPORTS COMPLEX EQUIPMENT		REPAIR/MAINTENANCE		
01-01075	JOHNSON CONTROLS					
		I-1-135121169752	201-45160-42500	REPAIR & MAIN S CHILLER CIRCUIT LEAK	205646	1,309.12
	PROJ: H13-42500	ARENA-SOUTH RINK		REPAIR-MAINTENANCE		
01-01199	STURDEVANTS AUTO VALUE					
		I-815051106	201-45160-42500	REPAIR & MAIN LAWN/GARDEN APPLCTR,FILTERS	205710	200.76
	PROJ: H01-42500	SPORTS COMPLEX EQUIPMENT		REPAIR/MAINTENANCE		
01-01355	MIDWEST TURF & IRRIGATI					
		I-3945566-00	201-45160-42500	REPAIR & MAIN CARRIER SHAFT PIVOT	205663	57.86
	PROJ: H01-42500	SPORTS COMPLEX EQUIPMENT		REPAIR/MAINTENANCE		
01-01404	MITCHELL IRON & SUPPLY					
		I-84755	201-45160-42600	SUPPLIES & MA CONNECTOR LINK,OFFSET LINK	205666	7.24
	PROJ: H01-42600	SPORTS COMPLEX EQUIPMENT		SUPPLIES/MAINTENANCE		
01-01518	VERIZON WIRELESS					
		I-6104757903	201-45160-42800	UTILITIES ACCT #886931646-00001	205727	47.74
01-01830	NORTHWESTERN ENERGY					
		I-2579265-6.01.25	201-45160-42800	UTILITIES 1101 N EDMUNDS PWSP M SHLTR	205672	58.34
	PROJ: H10-42800	MUNROE PARK		UTILITIES		

PACKET : 07238 07239 07240 07241
VENDOR SET: Mult
FUND : 201 PARK FUND
DEPARTMENT: 5160 SPORTS COMPLEXES BANK: Multi
BUDGET TO USE: CB-CURRENT BUDGET

VENDOR	NAME	ITEM #	G/L ACCOUNT NAME	DESCRIPTION	CHECK#	AMOUNT
01-01830	NORTHWESTERN ENERGY continued					
		I-2585121-3.01.25	201-45160-42800 UTILITIES	313 N HARMON DR	205672	97.69
	PROJ: H07-42800	PEPSI COMPLEX	UTILITIES			
		I-2586408-3.01.25	201-45160-42800 UTILITIES	TOURNEY HDQT	205672	18.86
	PROJ: H04-42800	BASEBALL	UTILITIES			
		I-2586410-9.01.25	201-45160-42800 UTILITIES	1301 N MINNESOTA LIFT	205672	23.82
	PROJ: H05-42800	SOFTBALL	UTILITIES			
		I-2718054-6.01.25	201-45160-42800 UTILITIES	5825 TOWER RD	205672	941.52
	PROJ: H07-42800	PEPSI COMPLEX	UTILITIES			
		I-2787244-9.01.25	201-45160-42800 UTILITIES	D E CONCESSION	205672	31.19
	PROJ: H05-42800	SOFTBALL	UTILITIES			
		I-2787247-2.01.25	201-45160-42800 UTILITIES	WEST ELEC D E	205672	40.22
	PROJ: H05-42800	SOFTBALL	UTILITIES			
		I-2787248-0.01.25	201-45160-42800 UTILITIES	WEST ELEC F G	205672	84.55
	PROJ: H05-42800	SOFTBALL	UTILITIES			
		I-2787249-8.01.25	201-45160-42800 UTILITIES	H I J K SHOP	205672	39.89
	PROJ: H05-42800	SOFTBALL	UTILITIES			
		I-2787283-7.01.25	201-45160-42800 UTILITIES	SOCCER FIELD	205672	92.23
	PROJ: H07-42800	PEPSI COMPLEX	UTILITIES			
		I-2787285-2.01.25	201-45160-42800 UTILITIES	CADWELL PARK CONCESSION	205672	12.85
	PROJ: H04-42800	BASEBALL	UTILITIES			
		I-2825237-7.01.25	201-45160-42800 UTILITIES	1301 N MINNESOTA	205672	235.30
	PROJ: H04-42800	BASEBALL	UTILITIES			
		I-2920373-4.01.25	201-45160-42800 UTILITIES	STAD SCOREBOARD 23	205672	198.08
	PROJ: H04-42800	BASEBALL	UTILITIES			
		I-2991007-2.01.25	201-45160-42800 UTILITIES	1001 N MINNESOTA GMTR	205672	1,861.35
	PROJ: H06-42800	ARENA-NORTH RINK	UTILITIES			
01-02679	MENARD'S INC					
		I-82386	201-45160-42600 SUPPLIES & MA	PLIERS,NOSES	205658	23.56
	PROJ: H06-42600	ARENA-NORTH RINK	SUPPLIES-MATERIALS			
01-02811	JONES SUPPLIES					
		I-150387	201-45160-42600 SUPPLIES & MA	BLACK LINERS,SOAP,URINAL SCRNS	205647	474.50
	PROJ: H06-42600	ARENA-NORTH RINK	SUPPLIES-MATERIALS			
		I-150450	201-45160-42600 SUPPLIES & MA	TOILET TANK CLEANER	205647	217.04
	PROJ: H06-42600	ARENA-NORTH RINK	SUPPLIES-MATERIALS			
01-02880	THUNE TRUE VALUE & APPL					
		I-A587785	201-45160-42600 SUPPLIES & MA	BATTERIES	205719	10.99
	PROJ: H06-42600	ARENA-NORTH RINK	SUPPLIES-MATERIALS			
01-03490	VAN WALL EQUIPMENT INC					
		C-08162024	201-45160-42500 REPAIR & MAIN	FINANCE CHARGE REVERSED	205726	39.49-
	PROJ: H01-42500	SPORTS COMPLEX EQUIPMENT	REPAIR/MAINTENANCE			
		I-6471999	201-45160-42500 REPAIR & MAIN	HYDRAULIC CYLINDER	205726	670.90
	PROJ: H01-42500	SPORTS COMPLEX EQUIPMENT	REPAIR/MAINTENANCE			
01-08130	C & B OPERATIONS LLC					

PACKET : 07238 07239 07240 07241
VENDOR SET: Mult
FUND : 201 PARK FUND
DEPARTMENT: 5160 SPORTS COMPLEXES BANK: Multi
BUDGET TO USE: CB-CURRENT BUDGET

VENDOR	NAME	ITEM #	G/L ACCOUNT NAME	DESCRIPTION	CHECK#	AMOUNT
01-08130	C & B OPERATIONS LLC continued					
		I-13092646	201-45160-42500	REPAIR & MAIN WASHERS,KEYS,NUTS,BEARINGS	205586	726.38
	PROJ: H01-42500	SPORTS COMPLEX EQUIPMENT		REPAIR/MAINTENANCE		
01-09349	HOWES OIL CO					
		I-352795	201-45160-42610	GAS & FUEL UNLEADED GAS	205635	107.25
01-09703	AMAZON CAPITAL SERVICES					
		I-17DV-7LX6-C1X7	201-45160-42600	SUPPLIES & MA FOAM INSOLES	205568	186.15
	PROJ: H13-42600	ARENA-SOUTH RINK		SUPPLIES-MAINTENANCE		
				DEPARTMENT 5160 SPORTS COMPLEXES	TOTAL:	8,526.24

PACKET : 07238 07239 07240 07241
VENDOR SET: Mult
FUND : 201 PARK FUND
DEPARTMENT: 5210 PARKS BANK: Multi
BUDGET TO USE: CB-CURRENT BUDGET

VENDOR	NAME	ITEM #	G/L ACCOUNT NAME	DESCRIPTION	CHECK#	AMOUNT
01-00356	QUALIFIED PRESORT SERVI					
		I-2279-460	201-45210-42600	SUPPLIES & MA POSTAGE 01.16-31.2025	205687	27.01
01-00424	RUNNINGS SUPPLY INC					
		I-1995569	201-45210-42600	SUPPLIES & MA OIL ABSORBENT	205690	28.47
	PROJ: H51-42600	PARK SHOP		SUPPLIES/MATERIALS		
		I-1998514	201-45210-42600	SUPPLIES & MA STRAIGHT CLEVIS,TAPE MEASURE	205690	47.98
	PROJ: H51-42600	PARK SHOP		SUPPLIES/MATERIALS		
01-00436	CHS FARMERS ALLIANCE					
		I-IG1393	201-45210-42610	GAS & FUEL P&R RUBY FIELDMASTER	205592	389.38
	PROJ: H50-42610	PARKS EQUIPMENT		GAS/FUEL		
		I-IG1394	201-45210-42610	GAS & FUEL P&R UNLEADED GAS	205592	823.17
	PROJ: H50-42610	PARKS EQUIPMENT		GAS/FUEL		
01-01518	VERIZON WIRELESS					
		I-6104757903	201-45210-42800	UTILITIES ACCT #886931646-00001	205727	42.74
01-01830	NORTHWESTERN ENERGY					
		I-2580826-2.01.25	201-45210-42800	UTILITIES 800 E 11TH AVE	205672	8.80
	PROJ: H60-42800	NORTHRIDGE PARK		UTILITIES		
		I-2581610-9.01.25	201-45210-42800	UTILITIES PUBLIC BEACH	205672	63.57
	PROJ: H74-42800	PUBLIC BEACH		UTILITIES		
		I-2581647-1.01.25	201-45210-42800	UTILITIES 950 INDIAN VILLAGE RD	205672	28.70
	PROJ: H77-42800	SPORTSMANS CLUB		UTILITIES		
		I-2581648-9.01.25	201-45210-42800	UTILITIES ACCESS LOT LITE	205672	10.89
	PROJ: H79-42800	LAKE PARK ACCESS AREAS		UTILITIES		
		I-2581649-7.01.25	201-45210-42800	UTILITIES DAY CAMP	205672	58.08
	PROJ: H67-42800	DAY CAMP		UTILITIES		
		I-2582639-7.01.25	201-45210-42800	UTILITIES PATTON YOUNG	205672	168.38
	PROJ: H87-42800	PATTON YOUNG		UTILITIES		
		I-2583204-9.01.25	201-45210-42800	UTILITIES 1201 S MINNESOTA PARK JENNEWEI	205672	17.55
	PROJ: H58-42800	JENNEWEIN PARK		UTILITIES		
		I-2584325-1.01.25	201-45210-42800	UTILITIES 1300 S ROWLEY ST PARK PIONEER	205672	13.55
	PROJ: H61-42800	PIONEER PARK		UTILITIES		
		I-2584526-4.01.25	201-45210-42800	UTILITIES DRY RUN RESTROOM 20	205672	12.00
	PROJ: H55-42800	DRY RUN CREEK PARK		UTILITIES		
		I-2748483-1.01.25	201-45210-42800	UTILITIES ACCESS LOT METER	205672	12.00
	PROJ: H79-42800	LAKE PARK ACCESS AREAS		UTILITIES		
		I-2967874-5.01.25	201-45210-42800	UTILITIES 3100 INDIAN VILLAGE RD	205672	58.30
	PROJ: H65-42800	AMPHITHEATER		UTILITIES		
		I-2973566-9.01.25	201-45210-42800	UTILITIES 621 N MAIN ST	205672	15.43
	PROJ: H62-42800	ROTARY PARK		UTILITIES		
		I-3045799-8.01.25	201-45210-42800	UTILITIES 311 1/2 N HARMON	205672	117.11
	PROJ: H66-42800	CAMP ARROYA		UTILITIES		
		I-3328555-2.01.25	201-45210-42800	UTILITIES 425 S BURR	205672	82.81
	PROJ: H55-42800	DRY RUN CREEK PARK		UTILITIES		
		I-3449572-1.01.25	201-45210-42850	UTILITIES-VET 101 N MAIN ST	205672	99.38
	PROJ: H63-42850	VETERANS PARK		UTILITES/VETERANS PARK		

PACKET : 07238 07239 07240 07241
VENDOR SET: Mult
FUND : 201 PARK FUND
DEPARTMENT: 5210 PARKS BANK: Multi
BUDGET TO USE: CB-CURRENT BUDGET

VENDOR	NAME	ITEM #	G/L ACCOUNT NAME	DESCRIPTION	CHECK#	AMOUNT
01-01830	NORTHWESTERN ENERGY continued					
		I-3600484-4.01.25	201-45210-42800	UTILITIES 745 N HARMON DR RSTA	205672	24.50
	PROJ: H76-42800	SANDY BEACH		UTILITIES		
		I-3975325-6.01.25	201-45210-42800	UTILITIES 612 W ASH AVE	205672	55.10
	PROJ: H55-42800	DRY RUN CREEK PARK		UTILITIES		
01-02679	MENARD'S INC					
		I-82085	201-45210-42600	SUPPLIES & MA CARBON FILTER,SEDIMENT FILTER	205658	64.98
	PROJ: H51-42600	PARK SHOP		SUPPLIES/MATERIALS		
				DEPARTMENT 5210 PARKS	TOTAL:	2,269.88

PACKET : 07238 07239 07240 07241
VENDOR SET: Mult
FUND : 201 PARK FUND
DEPARTMENT: 5220 SUPERVISION BANK: Multi
BUDGET TO USE: CB-CURRENT BUDGET

VENDOR	NAME	ITEM #	G/L ACCOUNT NAME		DESCRIPTION	CHECK#	AMOUNT
01-01518	VERIZON WIRELESS						
		I-6104757903	201-45220-42800	UTILITIES	ACCT #886931646-00001	205727	47.74
01-06750	MITCHELL TELECOM						
		I-11078831	201-45220-42800	UTILITIES	ACCT #00223662-2	205668	0.29
				DEPARTMENT 5220	SUPERVISION	TOTAL:	48.03
				FUND 201	PARK FUND	TOTAL:	41,835.53

PACKET : 07238 07239 07240 07241
VENDOR SET: Mult
FUND : 203 LAKE MITCHELL
DEPARTMENT: 5220 LAKE BANK: Multi
BUDGET TO USE: CB-CURRENT BUDGET

VENDOR	NAME	ITEM #	G/L ACCOUNT NAME	DESCRIPTION	CHECK#	AMOUNT
01-07801	SOUKUP CONSTRUCTION INC					
		I-2023-3 P.E. #4	203-45220-43300	LAKE IMPROVEM 2023-3 P.E. #4	205704	311,504.45
				DEPARTMENT 5220 LAKE TOTAL:		311,504.45
				FUND 203 LAKE MITCHELL TOTAL:		311,504.45

PACKET : 07238 07239 07240 07241
VENDOR SET: Mult
FUND : 211 ENTERTAINMENT TAX
DEPARTMENT: 6311 ENTERTAINMENT TAX BANK: Multi
BUDGET TO USE: CB-CURRENT BUDGET

VENDOR	NAME	ITEM #	G/L ACCOUNT NAME	DESCRIPTION	CHECK#	AMOUNT
01-01396	MITCHELL CONVENTION & V					
		I-02012025	211-46311-42960	CONV VISITORS FEB 2025 ENTRNMNT TAX DISTRBTN	205665	21,875.00
				DEPARTMENT 6311 ENTERTAINMENT TAX	TOTAL:	21,875.00
				FUND 211 ENTERTAINMENT TAX	TOTAL:	21,875.00

PACKET : 07238 07239 07240 07241
VENDOR SET: Mult
FUND : 213 BUSINESS IMPROV DIST #3
DEPARTMENT: 6311 BUSINESS IMPROV DIST #3 BANK: Multi
BUDGET TO USE: CB-CURRENT BUDGET

VENDOR	NAME	ITEM #	G/L ACCOUNT NAME	DESCRIPTION	CHECK#	AMOUNT
01-04945	MIKE & JEN LAURITSEN					
		I-02112025	213-46311-42900	PROJECT IMPRO BID #3 WINDOW REPLACEMENT	205652	720.00
01-10395	JOHN ADAMO					
		I-02072025	213-46311-42900	PROJECT IMPRO BID #3 WINDOW RESTORATION	205565	3,000.00
				DEPARTMENT 6311 BUSINESS IMPROV DIST #3 TOTAL:		3,720.00
				FUND 213 BUSINESS IMPROV DIST #3 TOTAL:		3,720.00

PACKET : 07238 07239 07240 07241
VENDOR SET: Mult
FUND : 214 E-911 EMERGENCY
DEPARTMENT: 3500 E-911 BANK: Multi
BUDGET TO USE: CB-CURRENT BUDGET

VENDOR	NAME	ITEM #	G/L ACCOUNT NAME	DESCRIPTION	CHECK#	AMOUNT
01-04308	SANTEL COMMUNICATIONS C					
		I-11106375	214-43500-42800	UTILITIES - T ACCT #00212623-2	205696	30.00
01-06750	MITCHELL TELECOM					
		I-11078831	214-43500-42800	UTILITIES - T ACCT #00223662-2	205668	10.17
01-10486	AT&T MOBILITY - POLICE					
		I-9001X01232025	214-43500-42800	UTILITIES - T ACCT #287283989001	205572	46.19
				DEPARTMENT 3500 E-911	TOTAL:	86.36
				FUND 214 E-911 EMERGENCY	TOTAL:	86.36

PACKET : 07238 07239 07240 07241
VENDOR SET: Mult
FUND : 218 COMMUNITY SERVICES
DEPARTMENT: N/A NON-DEPARTMENTAL BANK: Multi
BUDGET TO USE: CB-CURRENT BUDGET

VENDOR	NAME	ITEM #	G/L ACCOUNT NAME		DESCRIPTION	CHECK#	AMOUNT
01-03091	THUNDERBIRD LODGE						
		I-01292025	218-3464	RENTALS-JVCC	VENUE RENTAL REFUND	205718	150.00
				DEPARTMENT	NON-DEPARTMENTAL	TOTAL:	150.00

PACKET : 07238 07239 07240 07241
VENDOR SET: Mult
FUND : 218 COMMUNITY SERVICES
DEPARTMENT: 5150 PALACE TRANSIT BANK: Multi
BUDGET TO USE: CB-CURRENT BUDGET

VENDOR	NAME	ITEM #	G/L ACCOUNT NAME	DESCRIPTION	CHECK#	AMOUNT
01-01199	STURDEVANTS AUTO VALUE					
		I-815050846	218-45150-42600	SUPPLIES & MA WINDSHIELD SPRAY	205710	9.87
	PROJ: E01-GASUP	5311-FY18/19		Garage Supplies		
01-01322	LARRY'S I-90 SERVICE IN					
		I-105813	218-45150-42610	GAS OIL TIRES MOUNT & BALANCE TIRES	205651	648.18
	PROJ: E01-TIR	5311-FY18/19		Tires		
01-02811	JONES SUPPLIES					
		I-150443	218-45150-42600	SUPPLIES & MA ROLL TOWELS,BLACK LINERS	205647	30.13
	PROJ: E01-GASUP	5311-FY18/19		Garage Supplies		
01-06750	MITCHELL TELECOM					
		I-11078831	218-45150-42800	UTILITIES ACCT #00223662-2	205668	2.01
	PROJ: E01-OFFUT	5311-FY18/19		Office Utilities		
01-07717	VERN EIDE FORD					
		I-25045929	218-45150-42500	REPAIR AND MA PARKING BRAKE LEVER ASSEMBLY	205728	300.00
	PROJ: E01-MAINT	5311-FY18/19		Maintenance/Repairs		
01-07987	AT&T MOBILITY - PALACE					
		I-3882X01232025	218-45150-42800	UTILITIES ACCT #287298243882	205571	68.29
	PROJ: E01-OFFUT	5311-FY18/19		Office Utilities		
		I-3882X01232025	218-45150-42920	COMPUTER SOFT ACCT #287298243882	205571	467.86
	PROJ: E01-SHAH	5311-FY18/19		Tablet/Radio Contract		
01-08328	JESSICA PICKETT					
		I-01312025	218-45150-42700	TRAVEL, CONFE MEALS-PIERRE TRANSIT AT CAPITA	205685	60.00
	PROJ: E01-TRA	5311-FY18/19		Travel/Training		
01-09349	HOWES OIL CO					
		I-352795	218-45150-42610	GAS OIL TIRES UNLEADED GAS	205635	7,055.58
01-09703	AMAZON CAPITAL SERVICES					
		C-1YP7-76CM-D1FQ	218-45150-43411	COMPUTER HARD RETURNED SPEAKER	205568	135.00-
	PROJ: E01-RAD	5311-FY18/19		Radio Equipment		
		I-1YY7-W4GT-CDHW	218-45150-42600	SUPPLIES & MA MR CLEAN,LYSOL CLEANERS	205568	72.38
	PROJ: E01-GASUP	5311-FY18/19		Garage Supplies		

DEPARTMENT 5150 PALACE TRANSIT TOTAL: 8,579.30

PACKET : 07238 07239 07240 07241
VENDOR SET: Mult
FUND : 218 COMMUNITY SERVICES
DEPARTMENT: 5180 JVCC BANK: Multi
BUDGET TO USE: CB-CURRENT BUDGET

VENDOR	NAME	ITEM #	G/L ACCOUNT NAME	DESCRIPTION	CHECK#	AMOUNT
01-02811	JONES SUPPLIES					
		I-150409	218-45180-42600	SUPPLIES & MA T-PAPER,ROLL TOWELS,LINERS	205647	115.88
01-06750	MITCHELL TELECOM					
		I-11078831	218-45180-42800	UTILITIES ACCT #00223662-2	205668	0.15
01-07987	AT&T MOBILITY - PALACE					
		I-3882X01232025	218-45180-42800	UTILITIES ACCT #287298243882	205571	17.08
				DEPARTMENT 5180 JVCC	TOTAL:	133.11
				FUND 218 COMMUNITY SERVICES	TOTAL:	8,862.41

PACKET : 07238 07239 07240 07241
VENDOR SET: Mult
FUND : 219 NUTRITION
DEPARTMENT: 5140 NUTRITION BANK: Multi
BUDGET TO USE: CB-CURRENT BUDGET

VENDOR	NAME	ITEM #	G/L ACCOUNT NAME	DESCRIPTION	CHECK#	AMOUNT
01-00483	COUNTY FAIR					
		I-02032025	219-45140-42911	CONTRACT SERV JAN 2025 DINE CARDS	205603	1,243.20
01-02811	JONES SUPPLIES					
		I-150443	219-45140-42605	MEAL SUPPLIES ROLL TOWELS,BLACK LINERS	205647	91.50
01-06232	COBORNS INC					
		I-02032025	219-45140-42911	CONTRACT SERV JAN 2025 DINE CARDS	205595	873.60
01-06750	MITCHELL TELECOM					
		I-11078831	219-45140-42800	UTILITIES ACCT #00223662-2	205668	0.24
01-07987	AT&T MOBILITY - PALACE					
		I-3882X01232025	219-45140-42800	UTILITIES ACCT #287298243882	205571	17.08
01-09069	BIG DADDY D'S INC					
		I-02032025	219-45140-42911	CONTRACT SERV SR MEALS 01.20-24.2025	205580	1,600.80
		I-961	219-45140-42911	CONTRACT SERV SR MEALS 01.27-31.2025	205580	1,973.40
01-09349	HOWES OIL CO					
		I-352795	219-45140-42610	GAS, OIL, TIR UNLEADED GAS	205635	248.64
01-10569	THE DUGOUT					
		I-02032025	219-45140-42911	CONTRACT SERV JAN 2025 SR MEALS-TRIPP	205619	2,757.00

DEPARTMENT 5140 NUTRITION TOTAL: 8,805.46

FUND 219 NUTRITION TOTAL: 8,805.46

PACKET : 07238 07239 07240 07241
VENDOR SET: Mult
FUND : 230 AIRPORT
DEPARTMENT: 3500 AIRPORT BANK: Multi
BUDGET TO USE: CB-CURRENT BUDGET

VENDOR	NAME	ITEM #	G/L ACCOUNT NAME		DESCRIPTION	CHECK#	AMOUNT
01-01518	VERIZON WIRELESS						
		I-6104757903	230-43500-42800	UTILITIES	ACCT #886931646-00001	205727	47.74
01-01830	NORTHWESTERN ENERGY						
		I-2585924-0.01.25	230-43500-42800	UTILITIES	MITCHELL AIRPORT	205672	189.91
		I-2585926-5.01.25	230-43500-42800	UTILITIES	AIRPORT SECURITY GATE	205672	14.06
		I-2585934-9.01.25	230-43500-42800	UTILITIES	MITCHELL AIRPORT 5	205672	542.80
		I-2585936-4.01.25	230-43500-42800	UTILITIES	5971 AIRPORT RD BLDG 24	205672	259.47
		I-2585992-7.01.25	230-43500-42800	UTILITIES	6601 N MAIN	205672	1,039.97
		I-2830030-9.01.25	230-43500-42800	UTILITIES	NR RD AND HWY 37 AP SIGN	205672	14.23
		I-2830632-2.01.25	230-43500-42800	UTILITIES	5951 AIRPORT RD	205672	300.91
01-03100	CENTURY LINK						
		I-333866399.01.25	230-43500-42800	UTILITIES	ACCT #333866399	205590	67.92
01-06750	MITCHELL TELECOM						
		I-11080341	230-43500-42800	UTILITIES	ACCT #00248999-0	205668	72.95

DEPARTMENT 3500 AIRPORT TOTAL: 2,549.96

FUND 230 AIRPORT TOTAL: 2,549.96

PACKET : 07238 07239 07240 07241
VENDOR SET: Mult
FUND : 602 WATER
DEPARTMENT: 3330 WATER TREATMENT PLANT BANK: Multi
BUDGET TO USE: CB-CURRENT BUDGET

VENDOR	NAME	ITEM #	G/L ACCOUNT NAME	DESCRIPTION	CHECK#	AMOUNT
01-00712	NAPA CENTRAL					
		I-810711	602-43330-42600	SUPPLIES & MA LAB SURF MAN	205671	36.00
01-01020	CENTRAL ELECTRIC COOPER					
		I-14579003.02.25	602-43330-42800	UTILITIES 31008 256TH ST	205589	5,749.86
01-01518	VERIZON WIRELESS					
		I-6104757903	602-43330-42800	UTILITIES ACCT #886931646-00001	205727	95.48
01-01830	NORTHWESTERN ENERGY					
		I-2585902-6.01.25	602-43330-42800	UTILITIES 2800 N MAIN ST	205672	9,743.26
		I-2586002-4.01.25	602-43330-42800	UTILITIES N LAKE MITCHELL	205672	233.81
		I-4240509-2.01.25	602-43330-42800	UTILITIES 41008 256TH ST	205672	525.58
01-02679	MENARD'S INC					
		I-82640	602-43330-42600	SUPPLIES & MA ELBOW,ELECTAPE,RUBBER PIPE	205658	17.94
		I-82693	602-43330-42600	SUPPLIES & MA CLEANER,MARKING PAINT	205658	76.84
01-02880	THUNE TRUE VALUE & APPL					
		I-A587629	602-43330-42600	SUPPLIES & MA WIRELESS THERMOMETER	205719	21.49
01-04312	USA BLUEBOOK					
		I-INV00616483	602-43330-42600	SUPPLIES & MA SENSOR ANALOG,TRANSMITTER	205725	2,389.55
01-04692	B-Y WATER DISTRICT					
		I-06771.02.25	602-43330-42850	B-Y WATER CHA OLD METER READ 01.2025	205575	27,798.33
		I-6771.02.25	602-43330-42850	B-Y WATER CHA NEW METER READ 01.2025	205575	31,854.83
01-09349	HOWES OIL CO					
		I-352795	602-43330-42610	GAS & FUEL UNLEADED GAS	205635	97.70
01-09703	AMAZON CAPITAL SERVICES					
		I-1V33-J1LH-YL4X	602-43330-42600	SUPPLIES & MA DROP CABLE	205568	124.99

DEPARTMENT 3330 WATER TREATMENT PLANT TOTAL: 78,765.66

PACKET : 07238 07239 07240 07241
VENDOR SET: Mult
FUND : 602 WATER
DEPARTMENT: 3340 WATER DISTRIBUTION BANK: Multi
BUDGET TO USE: CB-CURRENT BUDGET

VENDOR	NAME	ITEM #	G/L ACCOUNT NAME		DESCRIPTION	CHECK#	AMOUNT
01-00356	QUALIFIED PRESORT SERVI						
		I-2279-460	602-43340-42660	POSTAGE	POSTAGE 01.16-31.2025	205687	7.30
01-00424	RUNNINGS SUPPLY INC						
		I-2000871	602-43340-42600	SUPPLIES & MA	BATTERY	205690	8.99
		I-2003253	602-43340-42600	SUPPLIES & MA	GALV COUPLING	205690	41.94
		I-2004051	602-43340-42600	SUPPLIES & MA	SEARCH LIGHT BARE	205690	198.00
01-00532	A-OX WELDING SUPPLY CO						
		I-0000319626	602-43340-42600	SUPPLIES & MA	CO2 CYLINDER	205563	22.99
01-00786	SOUTH DAKOTA 811						
		I-SD25-00048	602-43340-42200	LOCATES	JAN 2025 MESSAGE FEES	205705	30.98
01-01239	BUTLER MACHINERY INC						
		I-13PS0085156	602-43340-42600	SUPPLIES & MA	PAD ASSMB	205585	1,072.33
01-01830	NORTHWESTERN ENERGY						
		I-2958403-4.01.25	602-43340-42800	UTILITIES	1800 VAN DYKE DR	205672	1,009.14
01-02470	CORE & MAIN LP						
		I-V912767	602-43340-42600	SUPPLIES & MA	HYMAX PRO	205598	2,734.20
		I-V921612	602-43340-42600	SUPPLIES & MA	VALVE BOX ADAPTOR	205598	474.85
		I-V935447	602-43340-42600	SUPPLIES & MA	VALVE BOX ADAPTOR MULTI FIT	205598	301.96
		I-W051148	602-43340-42522	WATER MAIN RE	3 WIRE PLAIN ENDS	205598	100.85
		I-W298055	602-43340-42522	WATER MAIN RE	METER ADAPTOR,COUPLING	205598	2,216.68
		I-W299615	602-43340-42525	HYDRANT REPAI	BARREL GASKETS,HYDRANT SEAT	205598	911.64
01-02642	SPENCER QUARRIES INC						
		I-54776	602-43340-42600	SUPPLIES & MA	3/4" NEBRASKA,1 1/2"X3/4" BALL	205706	681.19
01-08417	INFRASTRUCTURE DESIGN G						
		I-2020-20 P.E. #52A	602-43340-43355	ABOVE GROUND	2020-20 P.E. #52A	205638	36,631.11
		I-2020-20 P.E. #53	602-43340-43355	ABOVE GROUND	2020-20 P.E. #53	205638	639.50
01-09349	HOWES OIL CO						
		I-352795	602-43340-42610	GAS & FUEL	UNLEADED GAS	205635	1,497.36
01-09703	AMAZON CAPITAL SERVICES						
		I-16LF-NF4H-4TVL	602-43340-42600	SUPPLIES & MA	STEEL TOP HIP BOOTS	205568	194.95

DEPARTMENT 3340 WATER DISTRIBUTION TOTAL: 48,775.96

FUND 602 WATER TOTAL: 127,541.62

PACKET : 07238 07239 07240 07241
VENDOR SET: Mult
FUND : 604 SEWER
DEPARTMENT: 3200 WASTE WATER TREATMENT BANK: Multi
BUDGET TO USE: CB-CURRENT BUDGET

VENDOR	NAME	ITEM #	G/L ACCOUNT NAME		DESCRIPTION	CHECK#	AMOUNT
01-00008	ELFSTRAND'S ACE HARDWAR						
		I-4413/1	604-43200-42600	SUPPLIES	POWER MAX HD	205621	2,200.00
01-00356	QUALIFIED PRESORT SERVI						
		I-2279-460	604-43200-42660	POSTAGE	POSTAGE 01.16-31.2025	205687	0.73
01-00469	GEOTEK ENGINEERING & TE						
		I-2022-1 P.E. #5A	604-43200-43310	SOUTH PLANT I	2022-1 P.E. #5A	205629	2,490.00
01-00525	DAKOTA PUMP LLC						
		I-18934	604-43200-42600	SUPPLIES	FILTERS FILTERMAT	205607	673.50
01-00786	SOUTH DAKOTA 811						
		I-SD25-00048	604-43200-42200	PROFESSIONAL	JAN 2025 MESSAGE FEES	205705	30.97
01-01020	CENTRAL ELECTRIC COOPER						
		I-12550001.02.25	604-43200-42800	UTILITIES	41151 256TH ST	205589	9,246.00
01-01021	JOHN T JONES CONSTRUCTI						
		I-2022-1 P.E. #6	604-43200-43310	SOUTH PLANT I	2022-1 P.E. #6	205644	798,565.07
01-01199	STURDEVANTS AUTO VALUE						
		I-815050318	604-43200-42600	SUPPLIES	MANIFOLD RESURFACING,EPA	205710	206.00
		I-815050825	604-43200-42600	SUPPLIES	OIL FILTER FOR DOME	205710	7.93
		I-815050826	604-43200-42600	SUPPLIES	OIL,AIR.FUEL FILTERS	205710	47.53
		I-815051208	604-43200-42600	SUPPLIES	OIL FILTERS FOR DOME	205710	7.93
01-01450	MUTH ELECTRIC INC						
		I-677368	604-43200-42500	REPAIRS	DISCONNECT MOTOR PUMP 2	205669	102.45
01-01518	VERIZON WIRELESS						
		I-6104757903	604-43200-42800	UTILITIES	ACCT #886931646-00001	205727	47.74
01-02143	HDR ENGINEERING INC						
		I-2021-31 P.E. #40	604-43200-43300	NORTH PLANT I	2021-31 P.E. #40	205632	1,377.50
		I-2022-1 P.E. #25	604-43200-43310	SOUTH PLANT I	2022-1 P.E. #25	205632	97,064.24
01-02679	MENARD'S INC						
		I-82388A	604-43200-42600	SUPPLIES	TOOL HANGER,DRILLBIT,TAPCON	205658	52.93
01-02840	TESSIERS MECHANICAL CON						
		I-30006775	604-43200-42600	SUPPLIES	FURNISH WASHABLE FILTERS	205715	1,655.36
01-03678	INTERSTATE OFFICE PRODU						
		I-01EF6040	604-43200-42600	SUPPLIES	LABELS	205642	56.70
01-04858	ALIGNMENT X-PERTS, INC.						
		I-8082-33	604-43200-42500	REPAIRS	USED TIRE	205567	50.00

PACKET : 07238 07239 07240 07241
VENDOR SET: Mult
FUND : 604 SEWER
DEPARTMENT: 3200 WASTE WATER TREATMENT BANK: Multi
BUDGET TO USE: CB-CURRENT BUDGET

VENDOR	NAME	ITEM #	G/L ACCOUNT NAME		DESCRIPTION	CHECK#	AMOUNT
01-09349	HOWES OIL CO						
		I-352795	604-43200-42610	GAS & FUEL	UNLEADED GAS	205635	52.24
01-10554	MIDWEST OIL COMPANY						
		I-1033365	604-43200-42600	SUPPLIES	MOBILGEAR 600 XP	205662	557.11
					DEPARTMENT 3200 WASTE WATER TREATMENT	TOTAL:	914,491.93

PACKET : 07238 07239 07240 07241
VENDOR SET: Mult
FUND : 604 SEWER
DEPARTMENT: 3250 WASTE WATER COLLECTION BANK: Multi
BUDGET TO USE: CB-CURRENT BUDGET

VENDOR	NAME	ITEM #	G/L ACCOUNT NAME		DESCRIPTION	CHECK#	AMOUNT
01-00081	RINKER MATERIALS						
		I-29593418	604-43250-43310	MANHOLE REHAB	ADJUSTING RING	205688	374.40
		I-30173597	604-43250-43310	MANHOLE REHAB	JOINT SEAL,GASKETS	205688	12,396.15
		I-30189627	604-43250-43310	MANHOLE REHAB	P4 C TIED,TIE ROD DOUBLE EYE	205688	10,041.58
		I-30189628	604-43250-43310	MANHOLE REHAB	MINIMUM HAUL CHARGE	205688	347.81
		I-30216862	604-43250-43310	MANHOLE REHAB	FABRIC FILTER	205688	211.68
01-00424	RUNNINGS SUPPLY INC						
		I-2004528	604-43250-42600	SUPPLIES	VINYL COATED CABLE,ROPE CLIP	205690	40.04
01-00525	DAKOTA PUMP LLC						
		I-18807	604-43250-42600	SUPPLIES	FLOAT NO 30' CONERY	205607	187.80
01-01020	CENTRAL ELECTRIC COOPER						
		I-12552001.02.25	604-43250-42800	UTILITIES	2824 S CAPITAL ST	205589	292.00
01-01050	IVERSON						
		I-5029324	604-43250-42600	SUPPLIES	EXHAUST MANIFOLD	205643	232.20
01-01199	STURDEVANTS AUTO VALUE						
		I-815051204	604-43250-42600	SUPPLIES	POLLEN FILTER,OIL FILTERS	205710	36.40
01-01307	SITEWORKS INC						
		I-2024-24 P.E. #3	604-43250-43337	D&D LONG'S/MA	2024-24 P.E. #3	205703	6,814.43
01-01830	NORTHWESTERN ENERGY						
		I-2579460-3.01.25	604-43250-42800	UTILITIES	N SANBORN AND 13TH AVE	205672	125.19
		I-2581214-0.01.25	604-43250-42800	UTILITIES	N FOSTER ST	205672	997.31
		I-25812590-3.01.25	604-43250-42800	UTILITIES	N HARMON DR	205672	259.68
		I-2581292-6.01.25	604-43250-42800	UTILITIES	2141 E HAVENS ST PLNT SWR	205672	11,116.53
		I-2581650-5.01.25	604-43250-42800	UTILITIES	KIPPES CV	205672	97.10
		I-2581719-8.01.25	604-43250-42800	UTILITIES	S HARMON AND OHLMAN	205672	231.71
		I-2581747-9.01.25	604-43250-42800	UTILITIES	S HARMON DR	205672	99.49
		I-2582035-8.01.25	604-43250-42600	SUPPLIES	1500 W 23RD AVE	205672	233.03
		I-2585907-5.01.25	604-43250-42800	UTILITIES	AIRPORT RD WST WTR	205672	168.58
		I-2828568-2.01.25	604-43250-42800	UTILITIES	5709 ISLAND CT	205672	165.71
		I-3907866-2.01.25	604-43250-42800	UTILITIES	1040 N HARMON DR LIFT	205672	391.59
01-02679	MENARD'S INC						
		I-82650	604-43250-42600	SUPPLIES	HANGERS,ANTILLES LEVEL	205658	38.93
		I-82833	604-43250-42600	SUPPLIES	DEHUMIDFIER	205658	169.99
01-03495	HALME INC						
		I-2023-6 P.E. #5	604-43250-43349	N HARMON/AIRP	2023-6 P.E. #5	205630	170,098.32
01-09349	HOWES OIL CO						
		I-352795	604-43250-42610	GAS	UNLEADED GAS	205635	329.27

DEPARTMENT 3250 WASTE WATER COLLECTION TOTAL: 215,496.92

FUND 604 SEWER TOTAL: 1,129,988.85

PACKET : 07238 07239 07240 07241
VENDOR SET: Mult
FUND : 612 SANITATION
DEPARTMENT: 3220 RECYCLING PROGRAM BANK: Multi
BUDGET TO USE: CB-CURRENT BUDGET

VENDOR	NAME	ITEM #	G/L ACCOUNT NAME	DESCRIPTION	CHECK#	AMOUNT
01-00436	CHS FARMERS ALLIANCE					
		I-IZ8584	612-43220-42500	REPAIR & MAIN MOUNT STEER TIRES	205592	70.00
	PROJ: L4A-42500	951		REPAIR MAINTENANCE		
01-01199	STURDEVANTS AUTO VALUE					
		I-815050316	612-43220-42600	SUPPLIES FUEL FILTER	205710	58.85
	PROJ: L92-42600	178		SUPPLIES MATERIALS		
		I-815050823	612-43220-42600	SUPPLIES BATTERY,CORE RETURN	205710	132.67
	PROJ: L94-42600	920		SUPPLIES MATERIALS		
		I-815051207	612-43220-42600	SUPPLIES OIL, AIR FLEET	205710	238.11
	PROJ: L95-42600	921		SUPPLIES MATERIALS		
		I-815051207	612-43220-42600	SUPPLIES OIL, AIR CONSTRUCTION	205710	153.78
	PROJ: L4C-42600	198		SUPPLIES MATERIALS		
		I-815051207	612-43220-42600	SUPPLIES CABIN AIR,OIL FLEET	205710	88.99
	PROJ: L92-42600	178		SUPPLIES MATERIALS		
		I-815051207	612-43220-42600	SUPPLIES AIR DOMESTIC,AIR FARM	205710	38.79
	PROJ: L4C-42600	198		SUPPLIES MATERIALS		
01-02484	DARRINGTON WATER COND					
		I-60160.01.25	612-43220-42500	REPAIR & MAIN WATER COOLER RENTAL	205610	23.00
01-09682	DIESEL LAPTOPS LLC					
		I-INV156108	612-43220-42600	SUPPLIES TRUCK/OFF HWY RENEWAL	205617	1,106.25
01-10468	WALTER DAVIS					
		I-02102025	612-43220-42650	UNIFORMS 50% BOOTS REIMBURSED	205611	49.99
				DEPARTMENT 3220 RECYCLING PROGRAM	TOTAL:	1,960.43

PACKET : 07238 07239 07240 07241
VENDOR SET: Mult
FUND : 612 SANITATION
DEPARTMENT: 3230 WASTE COLLECTION BANK: Multi
BUDGET TO USE: CB-CURRENT BUDGET

VENDOR	NAME	ITEM #	G/L ACCOUNT NAME		DESCRIPTION	CHECK#	AMOUNT
01-00356	QUALIFIED PRESORT SERVI						
		I-2279-460	612-43230-42660	POSTAGE	POSTAGE 01.16-31.2025	205687	0.73
01-01117	FLEETPRIDE						
		I-122956931	612-43230-42600	SUPPLIES	ORING,OIL SEAL,FRICTION DISC	205627	483.99
	PROJ: L3A-42600	950		SUPPLIES SUPPLIES			
01-01199	STURDEVANTS AUTO VALUE						
		I-815050311	612-43230-42600	SUPPLIES	V-RIBBED,T-BOLT,CABIN AIR,FUEL	205710	241.08
	PROJ: L97-42600	173		SUPPLIES MATERIALS			
		I-815050311	612-43230-42600	SUPPLIES	V-RIBBED,T-BOLT,CABIN AIR,FUEL	205710	11.99
	PROJ: L98-42600	175		SUPPLIES MATERIALS			
		I-815050827	612-43230-42600	SUPPLIES	FUEL/WATER SEPARATOR,AIR DRYER	205710	69.38
	PROJ: L4A-42600	951		SUPPLIES MATERIALS			
		I-815051202	612-43230-42600	SUPPLIES	OIL FLEET,AIR FARM	205710	97.63
	PROJ: L99-42600	176		SUPPLIES MATERIALS			
01-02418	SANITATION PRODUCTS INC						
		I-91816	612-43230-42600	SUPPLIES	PUMP	205695	5,573.43
	PROJ: L4A-42600	951		SUPPLIES MATERIALS			
01-04066	TRANSWEST - SIOUX FALLS						
		I-094P10403	612-43230-42600	SUPPLIES	GAS CYLINDER	205723	178.46
01-09509	INNOVATIVE OFFICE SOLUT						
		I-IN4754327	612-43230-42600	SUPPLIES	PAPER,RULED NOTE PAD	205640	40.39
01-09682	DIESEL LAPTOPS LLC						
		I-INV156108	612-43230-42600	SUPPLIES	TRUCK/OFF HWY RENEWAL	205617	1,106.25

DEPARTMENT 3230 WASTE COLLECTION TOTAL: 7,803.33

PACKET : 07238 07239 07240 07241
VENDOR SET: Mult
FUND : 612 SANITATION
DEPARTMENT: 3240 LANDFILL BANK: Multi
BUDGET TO USE: CB-CURRENT BUDGET

VENDOR	NAME	ITEM #	G/L ACCOUNT NAME	DESCRIPTION	CHECK#	AMOUNT
01-00145	AMERICAN GARAGE DOOR CO					
		I-M43403	612-43240-42500	REPAIR AND MA LANDFILL SPRING,ROLLER REPAIR	205570	1,060.31
01-00424	RUNNINGS SUPPLY INC					
		I-2000819	612-43240-42600	SUPPLIES BULK BIN PRODUCTS	205690	6.68
	PROJ: L3C-42600	197		SUPPLIES MATERIALS		
01-00469	GEOTEK ENGINEERING & TE					
		I-2025-28 P.E. #1	612-43240-42205	MONITOR GROUN 2025-28 P.E. #1	205629	4,325.00
01-01199	STURDEVANTS AUTO VALUE					
		I-815050320	612-43240-42600	SUPPLIES HOSE CLAMPS,CABIN AIR FLEET	205710	2.78
		I-815050320	612-43240-42600	SUPPLIES HOSE CLAMPS,CABIN AIR FLEET	205710	27.89
	PROJ: L04-42600	103		SUPPLIES MATERIALS		
		I-815050843	612-43240-42600	SUPPLIES BATTERY,CORE RETURN	205710	102.99
	PROJ: L8B-42600	192		SUPPLIES MATERIALS		
		I-815051206	612-43240-42600	SUPPLIES FURNACE/FUEL PUMP	205710	27.16
	PROJ: L5B-42600	189		SUPPLIES MATERIALS		
01-01239	BUTLER MACHINERY INC					
		I-04PS0786958	612-43240-42500	REPAIR AND MA PIN,RETAINER,TIP	205585	487.66
	PROJ: L1B-42500	185		REPAIR MAINTENANCE		
01-02017	DAVISON RURAL WATER SYS					
		I-5095.02.25	612-43240-42800	UTILITIES JAN 2025 WATER USAGE	205614	113.55
01-02484	DARRINGTON WATER COND					
		I-49197.01.25	612-43240-42500	REPAIR AND MA WATER COOLER RENTAL	205610	39.00
01-02527	TRANSOURCE					
		I-41P57891	612-43240-42600	SUPPLIES FUEL FILTER,CARTRIDGE	205722	424.29
	PROJ: L9A-42600	182		SUPPLIES MATERIALS		
		I-41P58095	612-43240-42600	SUPPLIES WIRE HARNESS,BOLT,BEARING	205722	1,382.26
	PROJ: L3C-42600	197		SUPPLIES MATERIALS		
01-02939	DEPARTMENT OF AGRICULTU					
		I-02052025	612-43240-42210	STATE GARBAGE JAN 2025 SOLID WASTE SURCHARGE	205616	2,375.38
01-08130	C & B OPERATIONS LLC					
		I-13089425	612-43240-42600	SUPPLIES KEEP CLEAN FUEL PROTECTANT	205586	49.55
	PROJ: L9A-42600	182		SUPPLIES MATERIALS		
01-08417	INFRASTRUCTURE DESIGN G					
		I-24579	612-43240-42200	PROF FEES & S BOUNDRY SURVEY	205638	3,394.85
01-09349	HOWES OIL CO					
		I-352795	612-43240-42610	GAS & OIL UNLEADED GAS	205635	158.20
01-09509	INNOVATIVE OFFICE SOLUT					

PACKET : 07238 07239 07240 07241
VENDOR SET: Mult
FUND : 612 SANITATION
DEPARTMENT: 3240 LANDFILL BANK: Multi
BUDGET TO USE: CB-CURRENT BUDGET

VENDOR	NAME	ITEM #	G/L ACCOUNT NAME		DESCRIPTION	CHECK#	AMOUNT
01-09509	INNOVATIVE OFFICE SOLUT continued						
		I-IN4754327	612-43240-42600	SUPPLIES	PAPER,RULED NOTE PAD	205640	40.39
01-09682	DIESEL LAPTOPS LLC						
		I-INV156108	612-43240-42600	SUPPLIES	TRUCK/OFF HWY RENEWAL	205617	1,106.25
01-09729	CUSTOM OUTFITTERS PLUS						
		I-15683	612-43240-42650	UNIFORMS	WOMEN'S EMBROIDERY HOODIE	205604	60.00
01-10414	MIDWAY SERVICE dba VOLL						
		I-77177	612-43240-42600	SUPPLIES	DIESEL EXHAUST FLUID	205661	334.60
01-10469	SABER SHRED SOLUTIONS,						
		I-13191	612-43240-42500	REPAIR AND MA	TIRE SHREDDING	205692	6,605.85
01-10554	MIDWEST OIL COMPANY						
		I-1033394	612-43240-42600	SUPPLIES	KLONDIKE BRAKE BLAST	205662	143.55

DEPARTMENT 3240 LANDFILL TOTAL: 22,268.19

FUND 612 SANITATION TOTAL: 32,031.95

PACKET : 07238 07239 07240 07241
VENDOR SET: Mult
FUND : 613 CORN PALACE
DEPARTMENT: 5650 CORN PALACE BANK: Multi
BUDGET TO USE: CB-CURRENT BUDGET

VENDOR	NAME	ITEM #	G/L ACCOUNT NAME	DESCRIPTION	CHECK#	AMOUNT
01-00236	BENDER SEWER & DRAIN LL					
		I-36176	613-45650-42500	REPAIRS & MAI CORN PALACE CLEAN OUT LINE	205579	310.00
01-00356	QUALIFIED PRESORT SERVI					
		I-2279-460	613-45650-42660	SHIPPING/POST POSTAGE 01.16-31.2025	205687	27.74
01-00532	A-OX WELDING SUPPLY CO					
		I-0001415095	613-45650-42610	COST OF GOODS CO2 CYLINDER FILL	205563	78.53
		I-0001418522	613-45650-42610	COST OF GOODS CO2 CYLINDER FILL	205563	78.53
01-01590	MCLEOD'S PRINTING					
		I-81721	613-45650-42600	SUPPLIES & MA SIETSMA BUSINESS CARDS	205656	35.90
01-01805	FASTENAL COMPANY					
		I-SDMIT176577	613-45650-42600	SUPPLIES & MA MALE CONNECTOR	205625	27.36
01-01830	NORTHWESTERN ENERGY					
		I-2587291-2.02.25	613-45650-42800	UTILITIES 600 N MAIN ST	205672	3,644.15
		I-2587292-0.01.25	613-45650-42800	UTILITIES 600 N MAIN ST	205672	3,880.49
		I-3219913-5.01.25	613-45650-42800	UTILITIES 617 N MAIN	205672	14.06
		I-3458684-2.01.25	613-45650-42850	CP PLAZA UTIL 6TH AVE PARK	205672	110.53
01-01964	DAKOTA SUPPLY GROUP					
		I-S104435964.001	613-45650-42610	COST OF GOODS PLEATED AIR FILTERS	205608	143.73
01-02560	PEPSI COLA COMPANY					
		I-97812292	613-45650-42610	COST OF GOODS POP,BUBBLRS	205684	422.17
01-02679	MENARD'S INC					
		I-82433	613-45650-42600	SUPPLIES & MA HOOK RAIL	205658	35.98
01-02811	JONES SUPPLIES					
		I-150438	613-45650-42610	COST OF GOODS BLACK LINERS,DEODERIZER,T-TISS	205647	331.80
01-03678	INTERSTATE OFFICE PRODU					
		I-01EF4436	613-45650-42600	SUPPLIES & MA CALENDAR	205642	32.83
01-03700	CORE-MARK US LLC					
		I-1982002	613-45650-42610	COST OF GOODS SUCKERS,BUNS,HOT DOGS,BURGERS	205599	2,435.65
01-04927	STEVE SCHOEPF					
		I-01282025	613-45650-42600	SUPPLIES & MA SCREWS,NAILS REIMBURSED	205699	45.96
01-06750	MITCHELL TELECOM					
		I-11078831	613-45650-42800	UTILITIES ACCT #00223662-2	205668	0.42
01-07344	CHESTERMAN COMPANY					
		I-11681247	613-45650-42610	COST OF GOODS COCA COLA BIBS,POWERADES,TEAS	205591	1,384.80
		I-11686976	613-45650-42610	COST OF GOODS LIDS,CUPS,MONSTERS,TEAS,POWERA	205591	2,694.35

PACKET : 07238 07239 07240 07241
VENDOR SET: Mult
FUND : 613 CORN PALACE
DEPARTMENT: 5650 CORN PALACE BANK: Multi
BUDGET TO USE: CB-CURRENT BUDGET

VENDOR	NAME	ITEM #	G/L ACCOUNT NAME	DESCRIPTION	CHECK#	AMOUNT
01-08281	VESTIS					
		I-8380258061	613-45650-42500	REPAIRS & MAI MAT CLEANING	205729	42.29
01-09044	INTELLIPRO SECURITY LLC					
		I-4260	613-45650-42600	SUPPLIES & MA INSTALL CONCESSIONS CAMERAS	205641	780.00
01-09349	HOWES OIL CO					
		I-352795	613-45650-42620	GAS & FUEL UNLEADED GAS	205635	125.55
01-09703	AMAZON CAPITAL SERVICES					
		I-1633-D3TW-FKCY	613-45650-42600	SUPPLIES & MA MEAT THERMOMETER,BOTTLE OPENER	205568	56.85
		I-1GY6-Q1J1-9YYV	613-45650-42600	SUPPLIES & MA USB HUB,HEADPHONE CHARGER	205568	26.96
		I-1RMH-WFVN-97ND	613-45650-42600	SUPPLIES & MA SCISSORS,TONGS,TAPE DISPENSER	205568	69.33
		I-1W14-RWTF-JPY6	613-45650-42600	SUPPLIES & MA BOX OFFICE CAMERAS,KEYBOARD	205568	89.00
01-10254	LEIGHTON FAMILY FARMS					
		I-2527	613-45650-42610	COST OF GOODS POPCORN	205653	700.00
01-10438	CRAIG STUCKY					
		I-01202025	613-45650-42600	SUPPLIES & MA TWO CONVENTION OVENS,STAND	205709	2,169.00
01-10541	BUILDERS FIRST SOURCE					
		I-99373693	613-45650-42600	SUPPLIES & MA PASLODE	205584	99.96
	PROJ: X04-42600	DECORATING		SUPPLIES		

DEPARTMENT 5650 CORN PALACE TOTAL: 19,893.92

FUND 613 CORN PALACE TOTAL: 19,893.92

PACKET : 07238 07239 07240 07241
VENDOR SET: Mult
FUND : 614 GOLF COURSE
DEPARTMENT: 5250 GOLF COURSE BANK: Multi
BUDGET TO USE: CB-CURRENT BUDGET

VENDOR	NAME	ITEM #	G/L ACCOUNT NAME	DESCRIPTION	CHECK#	AMOUNT
01-00356	QUALIFIED PRESORT SERVI					
		I-2279-460	614-45250-42600	SUPPLIES & MA POSTAGE 01.16-31.2025	205687	54.02
01-00436	CHS FARMERS ALLIANCE					
		I-IG1391	614-45250-42610	GAS & FUEL GOLF MAINT RUBY FIELDMASTER	205592	44.91
		I-IG1392	614-45250-42610	GAS & FUEL GOLF MAINT UNLEADED GAS	205592	119.13
01-00712	NAPA CENTRAL					
		I-810648	614-45250-42600	SUPPLIES & MA MOTOR OIL	205671	39.48
01-01355	MIDWEST TURF & IRRIGATI					
		C-3946078-00	614-45250-42600	SUPPLIES & MA RETURNED BEVEL GEAR	205663	118.43-
		I-3945290-00	614-45250-42600	SUPPLIES & MA BEVEL GEAR,BEDKNIVES	205663	1,147.29
01-01404	MITCHELL IRON & SUPPLY					
		I-84813	614-45250-42600	SUPPLIES & MA REPAIR TUBE,BLACK PIPE,CUTTING	205666	50.69
01-01518	VERIZON WIRELESS					
		I-6104757903	614-45250-42800	UTILITIES ACCT #886931646-00001	205727	42.74
01-08281	VESTIS					
		I-6380245869	614-45250-42600	SUPPLIES & MA MAT CLEANING	205729	33.26

DEPARTMENT 5250 GOLF COURSE TOTAL: 1,413.09

FUND 614 GOLF COURSE TOTAL: 1,413.09

PACKET : 07238 07239 07240 07241
VENDOR SET: Mult
FUND : 619 CAMPGROUND
DEPARTMENT: 5220 CAMPGROUND BANK: Multi
BUDGET TO USE: CB-CURRENT BUDGET

VENDOR	NAME	ITEM #	G/L ACCOUNT NAME		DESCRIPTION	CHECK#	AMOUNT
01-01830	NORTHWESTERN ENERGY						
		I-3394102-2.01.25	619-45220-42800	UTILITIES	2601 N MAIN ST	205672	603.12
		I-3988458-0.01.25	619-45220-42800	UTILITIES	2601 N MAIN ST SHWR	205672	12.00
				DEPARTMENT 5220	CAMPGROUND	TOTAL:	615.12
				FUND 619	CAMPGROUND	TOTAL:	615.12

PACKET : 07238 07239 07240 07241
VENDOR SET: Mult
FUND : 621 EMERGENCY MEDICAL SERVICE
DEPARTMENT: N/A NON-DEPARTMENTAL BANK: Multi
BUDGET TO USE: CB-CURRENT BUDGET

VENDOR	NAME	ITEM #	G/L ACCOUNT NAME	DESCRIPTION	CHECK#	AMOUNT
01-01700	AAA COLLECTIONS INC					
		I-7783-2.01.25	621-369	REFUNDS & REI COLLECTION FEES	205564	9.60
				DEPARTMENT NON-DEPARTMENTAL TOTAL:		9.60

PACKET : 07238 07239 07240 07241
VENDOR SET: Mult
FUND : 621 EMERGENCY MEDICAL SERVICE
DEPARTMENT: 4600 EMS BANK: Multi
BUDGET TO USE: CB-CURRENT BUDGET

VENDOR	NAME	ITEM #	G/L ACCOUNT NAME		DESCRIPTION	CHECK#	AMOUNT
01-00532	A-OX WELDING SUPPLY CO						
		I-0000319628	621-44600-42600	SUPPLIES	MEDICAL CYLINDER FILL	205563	52.28
01-01404	MITCHELL IRON & SUPPLY						
		I-84735	621-44600-42600	SUPPLIES	HEX HEADS,NYLOCK,WASHER	205666	6.36
01-01518	VERIZON WIRELESS						
		I-6104757903	621-44600-42800	UTILITIES	ACCT #886931646-00001	205727	102.32
01-02700	HENRY SCHEIN INC						
		I-31404196	621-44600-42600	SUPPLIES	DRESSING,GLOVES,IV CATHETERS	205633	1,449.71
01-02804	TMA STORES						
		I-107398	621-44600-42530	REPAIR & MAIN	FLAT TIRE REPAIR	205720	56.35
01-03466	ESO SOLUTIONS INC						
		I-ESO-160082	621-44600-42693	SOFTWARE/SUPP	FIRE INSPECTION SOFTWARE	205624	7,410.80
01-04240	LAERDAL MEDICAL CORPORA						
		I-2025/2000002847	621-44600-42600	SUPPLIES	MONITOR BAGS	205649	293.55
		I-2025/2000003133	621-44600-42600	SUPPLIES	MONITOR BAG	205649	293.55
01-04374	MED-TECH RESOURCE INC						
		I-152046	621-44600-42600	SUPPLIES	OXYGEN BAGS	205657	1,253.83
01-08340	LEWIS FAMILY DRUG LLC						
		I-224872	621-44600-42600	SUPPLIES	GLULCOCARD SHINE	205654	29.97
01-08978	BUHL'S DRYCLEANERS & LI						
		I-57704	621-44600-42500	REPAIRS & MAI	LAUNDRY SERVICES	205583	35.00
		I-93571	621-44600-42500	REPAIRS & MAI	LAUNDRY SERVICES	205583	42.50
01-09349	HOWES OIL CO						
		I-352795	621-44600-42610	GAS & OIL	UNLEADED GAS	205635	798.95
01-10101	SAVVIK BUYING GROUP						
		I-2605	621-44600-42640	UNIFORMS	SHORTS,PANTS,SHIRTS,BELTS	205697	678.83

DEPARTMENT 4600 EMS TOTAL: 12,504.00

FUND 621 EMERGENCY MEDICAL SERVICETOTAL: 12,513.60

PACKET : 07238 07239 07240 07241
VENDOR SET: Mult
FUND : 700 AGENCY FUNDS
DEPARTMENT: 5300 AGENCY FUNDS BANK: Multi
BUDGET TO USE: CB-CURRENT BUDGET

VENDOR	NAME	ITEM #	G/L ACCOUNT NAME	DESCRIPTION	CHECK#	AMOUNT
01-00881	HANSON SCHOOL DISTRICT					
		I-01182025	700-45300-42904	CORN PALACE G 2025 GIRLS HANSON CLASSIC	205631	8,214.75
		I-01252025	700-45300-42904	CORN PALACE G 2025 BOYS HANSON CLASSIC	205631	10,867.05
01-04015	CORN PALACE					
		I-01042025	700-45300-42904	CORN PALACE G SACRED HOOPS CLASSIC	205600	1,503.10
		I-01182025	700-45300-42904	CORN PALACE G 2025 GIRLS HANSON CLASSIC RENT	205601	2,555.25
		I-01252025	700-45300-42904	CORN PALACE G 2025 BOYS HANSON CLASSIC RENT	205602	2,687.95
01-09871	SACRED HOOPS BASKETBALL					
		I-01042025	700-45300-42904	CORN PALACE G 2025 SACRED HOOPS BASKETBALL	205693	2,659.74

DEPARTMENT 5300 AGENCY FUNDS TOTAL: 28,487.84

FUND 700 AGENCY FUNDS TOTAL: 28,487.84

REPORT GRAND TOTAL: 1,883,907.48

** G/L ACCOUNT TOTALS **

YEAR	ACCOUNT	NAME	AMOUNT	=========LINE ITEM========= ANNUAL BUDGET	BUDGET AVAILABLE	OVER BUDG	=======GROUP BUDGET======= ANNUAL BUDGET	BUDGET AVAILABLE	OVER BUDG
2025-2026	101-41110-42300	LEGAL PUBLICATIONS	878.86	13,000	11,755.73				
	101-41220-42700	TRAVEL, CONF, DUES	245.69	5,500	5,254.31				
	101-41220-42800	UTILITIES-TELEPHONE	1.88	250	247.80				
	101-41410-42610	WEST GROUP LAW DATABASE	824.82	15,000	14,175.18				
	101-41410-42810	UTILITIES-TELEPHONE	0.31	100	99.36				
	101-41420-42600	SUPPLIES & MATERIALS	205.12	6,120	5,750.12				
	101-41420-42800	UTILITIES - TELEPHONE	1.75	260	254.54				
	101-41440-42210	PROFESSIONAL SERVICES	323.00	12,338	12,015.00				
	101-41440-42231	EMPLOYEE PHYSICALS,DRUG TE	3,020.60	39,151	33,623.40				
	101-41440-42600	SUPPLIES & MATERIALS	28.32	1,500	1,471.68				
	101-41440-42800	UTILITIES	0.41	250	247.76				
	101-41920-42811	UTILITIES-CITY HALL	1,976.51	19,000	17,023.49				
	101-41920-43410	REPAIRS-CITY HALL	66.84	0	66.84-	Y			
	101-41935-42250	MANAGED PRINT SERVICES	4,622.70	52,000	47,377.30				
	101-41935-42615	POSTAGE	368.19	7,500	6,812.36				
	101-41935-42640	COPY MACHINE SUPPLIES	218.10	2,700	2,481.90				
	101-41935-42850	UTILITIES/TELEPHONE	2,499.09	16,690	11,694.21				
	101-41935-42920	COMPUTER SOFTWARE	12,159.34	116,115	26,360.04				
	101-42110-42200	PROFESSIONAL SERVICES	825.71	9,800	8,559.55				
	101-42110-42500	REPAIR & MAINTENANCE	125.08	11,970	11,518.68				
	101-42110-42600	SUPPLIES	853.78	31,019	28,920.93				
	101-42110-42610	GAS OIL TIRES	5,716.20	65,000	58,490.09				
	101-42110-42640	UNIFORM ALLOWANCE	1,923.66	7,000	4,651.29				
	101-42110-42800	TELEPHONE	1,105.61	14,500	13,293.70				
	101-42110-42810	UTILITIES	535.33	7,150	6,403.25				
	101-42110-42906	DAVISON COUNTY SEARCH & RE	1,500.00	1,500	0.00				
	101-42130-42500	REPAIRS	14.18	6,000	5,550.49				
	101-42130-42520	EMERGENCY SIREN UTILITIES	225.34	2,900	2,618.97				
	101-42130-42530	TRAFFIC LIGHTS MAINT	1,300.00	16,000	14,675.01				
	101-42130-42535	LIGHT MAINTENANCE	392.38	27,000	26,406.28				
	101-42130-42540	SIGNS	13.53	16,000	15,986.47				
	101-42130-42545	PAINT	188.97	21,000	20,789.04				
	101-42130-42570	REPAIRS-TRAFFIC ACCIDENTS	1,220.55	0	1,220.55-	Y			
	101-42130-42600	SUPPLIES	76.87	4,500	4,369.15				
	101-42130-42610	GAS, OIL, TIRES	1,285.92	5,000	3,714.08				
	101-42130-42640	UNIFORMS	100.00	500	342.72				
	101-42130-42810	UTILITIES-TRAFFIC LIGHTS	3,378.83	38,000	34,180.14				
	101-42130-42820	TELEPHONE	135.49	1,200	1,064.51				
	101-42130-42835	UTILITIES-STREET LIGHTS	24,510.79	260,000	235,477.21				
	101-42200-42600	SUPPLIES	400.17	24,950	23,409.68				
	101-42200-42610	GAS & OIL	248.99	11,150	10,901.01				
	101-42200-42640	UNIFORMS	556.47	4,900	4,343.53				
	101-42200-42693	COMPUTER SOFTWARE	10,850.00	13,350	1,500.00				
	101-42200-42800	TELEPHONE	2.68	2,500	2,393.95				
	101-42200-42810	UTILITIES	4,744.81	44,000	39,244.57				

** G/L ACCOUNT TOTALS **

YEAR	ACCOUNT	NAME	AMOUNT	LINE ITEM ANNUAL BUDGET	LINE ITEM BUDGET AVAILABLE	LINE ITEM OVER BUDG	GROUP BUDGET ANNUAL BUDGET	GROUP BUDGET AVAILABLE	GROUP BUDGET OVER BUDG
	101-42200-43200	BUILDINGS	1,902.58	20,000	18,097.42				
	101-43100-42500	REPAIRS	878.70	150,000	145,274.07				
	101-43100-42600	SUPPLIES	16,710.36	20,000	1,134.95-	Y			
	101-43100-42610	GAS	562.95	87,000	86,437.05				
	101-43100-42650	UNIFORMS	124.95	3,750	3,525.07				
	101-43100-42700	TRAVEL, CONF,DUES	875.00	900	25.00				
	101-43100-42800	UTILITIES	2.42	15,000	13,602.18				
	101-43110-42200	PROFESSIONAL SERVICES	30.00	10,000	9,970.00				
	101-43110-42500	REPAIRS	102.80	1,000	869.03				
	101-43110-42600	SUPPLIES	167.23	4,200	3,928.98				
	101-43110-42610	GAS	682.19	7,000	6,317.81				
	101-43110-42700	TRAVEL CONF DUES	56.00	4,000	3,659.00				
	101-43110-42750	PLANNING COMMISSION EXPENS	53.94	1,200	1,038.18				
	101-43110-42800	UTILITIES	84.30	2,000	1,907.94				
	101-43110-42916	NUISANCE ABATEMENT	5.31	15,000	14,989.38				
	101-43120-43300	STREET OVERLAY MAINT	6,000.00	749,250	696,754.06				
	101-43120-43312	WEST END BRIDGE	890.00	0	890.00-	Y			
	101-43130-42600	SUPPLIES & MATERIALS	2,489.24	0	6,447.80-	Y			
	101-43700-42600	SUPPLIES & MATERIALS	394.17	16,000	12,968.85				
	101-43700-42603	WEED EATERS SUPPLIES	279.00	1,500	1,221.00				
	101-43700-42610	GAS & FUEL	283.21	10,000	9,716.79				
	101-43700-42800	UTILITIES	73.32	5,500	5,128.76				
	101-44120-42800	UTILITIES-POUND	252.11	2,400	2,147.89				
	101-44120-42900	IMPOUNDING DOGS	1,341.31	15,300	13,608.69				
	101-45000-42925	CASA	1,250.00	0	1,250.00-	Y			
	101-45500-42600	SUPPLIES & MATERIALS	328.71	12,000	11,455.15				
	101-45500-42800	UTILITIES	3,830.23	43,375	39,471.15				
	101-45500-43420	BOOKS	2,758.65	47,000	40,134.56				
	101-45500-43421	AUDIO-VISUAL	100.77	4,000	3,899.23				
	201-45110-42200	PROFESSIONAL FEES & SERVIC	200.00	2,600	2,400.00				
	201-45110-42600	SUPPLIES & MATERIALS	51.10	10,000	9,828.12				
	201-45110-42800	UTILITIES	1.08	400	397.06				
	201-45140-42300	PUBLISHING	4,006.00	46,500	37,414.00				
	201-45140-42500	REPAIR & MAINTENANCE	282.17	34,000	28,507.20				
	201-45140-42600	SUPPLIES & MATERIALS	2,445.85	33,500	29,003.02				
	201-45140-42601	CONCESSION SUPPLIES	435.54	15,000	12,422.61				
	201-45140-42800	UTILITIES	3,426.44	159,440	155,901.55				
	201-45140-43300	CAPITAL IMPROVEMENTS - OTH	20,143.20	20,000	143.20-	Y			
	201-45160-42500	REPAIR & MAINTENANCE	2,987.45	77,575	73,605.15				
	201-45160-42600	SUPPLIES & MATERIALS	995.92	54,400	52,160.49				
	201-45160-42603	SMALL EQUIPMENT	339.99	3,000	2,660.01				
	201-45160-42610	GAS & FUEL	419.25	15,000	14,190.75				
	201-45160-42800	UTILITIES	3,783.63	156,420	140,694.83				
	201-45210-42600	SUPPLIES & MATERIALS	168.44	90,300	87,157.86				
	201-45210-42610	GAS & FUEL	1,212.55	33,000	31,757.46				

** G/L ACCOUNT TOTALS **

YEAR	ACCOUNT	NAME	AMOUNT	LINE ITEM ANNUAL BUDGET	LINE ITEM BUDGET AVAILABLE	LINE ITEM OVER BUDG	GROUP BUDGET ANNUAL BUDGET	GROUP BUDGET AVAILABLE	GROUP BUDGET OVER BUDG
	201-45210-42800	UTILITIES	789.51	79,200	77,146.12				
	201-45210-42850	UTILITIES-VETERAN'S PARK	99.38	5,625	5,525.62				
	201-45220-42800	UTILITIES	48.03	640	591.44				
	203-45220-43300	LAKE IMPROVEMENTS	311,504.45	22,050,000	21,728,956.05				
	211-46311-42960	CONV VISITORS BUR	21,875.00	250,000	206,250.00				
	213-46311-42900	PROJECT IMPROVEMENTS	3,720.00	30,000	26,280.00				
	214-43500-42800	UTILITIES - TELEPHONE	86.36	2,102	1,887.91				
	218-3464	RENTALS-JVCC *NON-EXPENS	150.00	18,000-	15,236.25-				
	218-45150-42500	REPAIR AND MAINTENANCE	300.00	9,500	9,045.52				
	218-45150-42600	SUPPLIES & MATERIALS	112.38	8,800	8,301.90				
	218-45150-42610	GAS OIL TIRES	7,703.76	100,000	91,648.06				
	218-45150-42700	TRAVEL, CONFERENCE, TRAINI	60.00	300	240.00				
	218-45150-42800	UTILITIES	70.30	1,565	1,492.64				
	218-45150-42920	COMPUTER SOFTWARE/SUPPORT	467.86	50,750	50,282.14				
	218-45150-43411	COMPUTER HARDWARE	135.00-	0	135.00				
	218-45180-42600	SUPPLIES & MATERIALS	115.88	5,900	5,083.77				
	218-45180-42800	UTILITIES	17.23	32,302	32,284.73				
	219-45140-42605	MEAL SUPPLIES	91.50	4,000	3,696.33				
	219-45140-42610	GAS, OIL, TIRES	248.64	2,500	2,251.36				
	219-45140-42800	UTILITIES	17.32	415	397.56				
	219-45140-42911	CONTRACT SERVICES-MEALS	8,448.00	211,490	194,611.79				
	230-43500-42800	UTILITIES	2,549.96	19,500	16,877.09				
	602-43330-42600	SUPPLIES & MATERIALS	2,666.81	18,000	13,594.80				
	602-43330-42610	GAS & FUEL	97.70	3,000	2,902.30				
	602-43330-42800	UTILITIES	16,347.99	200,000	181,130.74				
	602-43330-42850	B-Y WATER CHARGES	59,653.16	975,000	915,346.84				
	602-43340-42200	LOCATES	30.98	2,000	1,929.63				
	602-43340-42522	WATER MAIN REPAIRS	2,317.53	20,000	17,682.47				
	602-43340-42525	HYDRANT REPAIRS	911.64	20,000	19,088.36				
	602-43340-42600	SUPPLIES & MATERIALS	5,731.40	125,000	118,456.78				
	602-43340-42610	GAS & FUEL	1,497.36	14,000	12,502.64				
	602-43340-42660	POSTAGE	7.30	10,000	9,019.10				
	602-43340-42800	UTILITIES	1,009.14	11,000	9,430.22				
	602-43340-43355	ABOVE GROUND STORAGE	37,270.61	11,000	14,864.29-	Y			
	604-43200-42200	PROFESSIONAL FEES	30.97	11,000	10,929.67				
	604-43200-42500	REPAIRS	152.45	20,000	19,720.00				
	604-43200-42600	SUPPLIES	5,464.99	25,000	17,540.17				
	604-43200-42610	GAS & FUEL	52.24	10,000	9,947.76				
	604-43200-42660	POSTAGE	0.73	9,000	8,028.59				
	604-43200-42800	UTILITIES	9,293.74	215,000	198,548.26				
	604-43200-43300	NORTH PLANT IMPROVEMENTS	1,377.50	215,000	213,622.50				
	604-43200-43310	SOUTH PLANT IMPROVEMENTS	898,119.31	215,000	840,976.42-	Y			
	604-43250-42600	SUPPLIES	938.39	50,000	47,741.24				
	604-43250-42610	GAS	329.27	6,000	5,670.73				
	604-43250-42800	UTILITIES	13,944.89	50,000	35,154.61				

** G/L ACCOUNT TOTALS **

YEAR	ACCOUNT	NAME	AMOUNT	LINE ITEM ANNUAL BUDGET	LINE ITEM BUDGET AVAILABLE	LINE ITEM OVER BUDG	GROUP BUDGET ANNUAL BUDGET	GROUP BUDGET AVAILABLE	GROUP BUDGET OVER BUDG
	604-43250-43310	MANHOLE REHABILITATION	23,371.62	100,000	76,628.38				
	604-43250-43337	D&D LONG'S/MATTIE STREET	6,814.43	100,000	93,185.57				
	604-43250-43349	N HARMON/AIRPORT LIFT STAT	170,098.32	100,000	358,184.83-	Y			
	612-43220-42500	REPAIR & MAINTENANCE	93.00	10,000	9,656.01				
	612-43220-42600	SUPPLIES	1,817.44	18,000	16,182.56				
	612-43220-42650	UNIFORMS	49.99	750	700.01				
	612-43230-42600	SUPPLIES	7,802.60	42,000	30,941.24				
	612-43230-42660	POSTAGE	0.73	8,000	7,916.76				
	612-43240-42200	PROF FEES & SERVICES	3,394.85	8,000	4,605.15				
	612-43240-42205	MONITOR GROUND WATER-OLD L	4,325.00	11,500	7,175.00				
	612-43240-42210	STATE GARBAGE FEES	2,375.38	35,000	32,624.62				
	612-43240-42500	REPAIR AND MAINTENANCE	8,192.82	32,000	23,485.93				
	612-43240-42600	SUPPLIES	3,648.39	60,000	39,671.75				
	612-43240-42610	GAS & OIL	158.20	110,000	107,716.75				
	612-43240-42650	UNIFORMS	60.00	1,000	940.00				
	612-43240-42800	UTILITIES	113.55	13,000	11,768.33				
	613-45650-42500	REPAIRS & MAINTENANCE	352.29	0	5,742.66-	Y			
	613-45650-42600	SUPPLIES & MATERIALS	3,469.13	0	8,715.98-	Y			
	613-45650-42610	COST OF GOODS SOLD	8,269.56	0	28,589.06-	Y			
	613-45650-42620	GAS & FUEL	125.55	0	125.55-	Y			
	613-45650-42660	SHIPPING/POSTAGE	27.74	0	157.86-	Y			
	613-45650-42800	UTILITIES	7,539.12	0	7,573.31-	Y			
	613-45650-42850	CP PLAZA UTILITIES	110.53	0	110.53-	Y			
	614-45250-42600	SUPPLIES & MATERIALS	1,206.31	25,000	21,354.98				
	614-45250-42610	GAS & FUEL	164.04	15,000	14,835.96				
	614-45250-42800	UTILITIES	42.74	20,180	19,573.67				
	619-45220-42800	UTILITIES	615.12	21,150	20,461.93				
	621-369	REFUNDS & REIMB*NON-EXPENS	9.60	4,150	3,265.80				
	621-44600-42500	REPAIRS & MAINTENANCE	77.50	1,500	1,422.50				
	621-44600-42530	REPAIR & MAINT-VEHICLE	56.35	8,500	8,443.65				
	621-44600-42600	SUPPLIES	3,379.25	30,400	26,574.08				
	621-44600-42610	GAS & OIL	798.95	13,775	12,976.05				
	621-44600-42640	UNIFORMS	678.83	3,600	2,921.17				
	621-44600-42693	SOFTWARE/SUPPORT	7,410.80	5,200	2,210.80-	Y			
	621-44600-42800	UTILITIES	102.32	3,200	2,937.58				
	700-45300-42904	CORN PALACE GAMES	28,487.84	3,200	71,291.15-	Y			
	** 2025-2026 YEAR TOTALS **		1,883,907.48						

** DEPARTMENT TOTALS **

ACCT	NAME	AMOUNT
101-1110	CITY COUNCIL	878.86
101-1220	CITY ADMINISTRATOR	247.57
101-1410	ATTORNEY'S OFFICE	825.13
101-1420	FINANCE	206.87
101-1440	HUMAN RESOURCES	3,372.33
101-1920	MUNICIPAL BUILDINGS	2,043.35
101-1935	INFORMATION TECHNOLOGY	19,867.42
101-2110	POLICE DEPARTMENT	12,585.37
101-2130	TRAFFIC DEPARTMENT	32,842.85
101-2200	FIRE DEPARTMENT	18,705.70
101-3100	STREET DEPARTMENT	19,154.38
101-3110	PUBLIC WORKS ADMIN	1,181.77
101-3120	STREET & SIDEWALK CONST	6,890.00
101-3130	SNOW REMOVAL	2,489.24
101-3700	CEMETERY	1,029.70
101-4120	ANIMAL CONTROL	1,593.42
101-5000	CULTURE & RECREATION	1,250.00
101-5500	LIBRARY	7,018.36
101 TOTAL	GENERAL	132,182.32
201-5110	RECREATION & AQUATICS	252.18
201-5140	RECREATION CENTER	30,739.20
201-5160	SPORTS COMPLEXES	8,526.24
201-5210	PARKS	2,269.88
201-5220	SUPERVISION	48.03
201 TOTAL	PARK FUND	41,835.53
203-5220	LAKE	311,504.45
203 TOTAL	LAKE MITCHELL	311,504.45
211-6311	ENTERTAINMENT TAX	21,875.00
211 TOTAL	ENTERTAINMENT TAX	21,875.00
213-6311	BUSINESS IMPROV DIST #3	3,720.00
213 TOTAL	BUSINESS IMPROV DIST #3	3,720.00

** DEPARTMENT TOTALS **

ACCT	NAME	AMOUNT
214-3500	E-911	86.36
214 TOTAL	E-911 EMERGENCY	86.36
218	NON-DEPARTMENTAL	150.00
218-5150	PALACE TRANSIT	8,579.30
218-5180	JVCC	133.11
218 TOTAL	COMMUNITY SERVICES	8,862.41
219-5140	NUTRITION	8,805.46
219 TOTAL	NUTRITION	8,805.46
230-3500	AIRPORT	2,549.96
230 TOTAL	AIRPORT	2,549.96
602-3330	WATER TREATMENT PLANT	78,765.66
602-3340	WATER DISTRIBUTION	48,775.96
602 TOTAL	WATER	127,541.62
604-3200	WASTE WATER TREATMENT	914,491.93
604-3250	WASTE WATER COLLECTION	215,496.92
604 TOTAL	SEWER	1,129,988.85
612-3220	RECYCLING PROGRAM	1,960.43
612-3230	WASTE COLLECTION	7,803.33
612-3240	LANDFILL	22,268.19
612 TOTAL	SANITATION	32,031.95
613-5650	CORN PALACE	19,893.92
613 TOTAL	CORN PALACE	19,893.92

** DEPARTMENT TOTALS **

ACCT	NAME	AMOUNT
614-5250	GOLF COURSE	1,413.09
614 TOTAL	GOLF COURSE	1,413.09
619-5220	CAMPGROUND	615.12
619 TOTAL	CAMPGROUND	615.12
621	NON-DEPARTMENTAL	9.60
621-4600	EMS	12,504.00
621 TOTAL	EMERGENCY MEDICAL SERVICE	12,513.60
700-5300	AGENCY FUNDS	28,487.84
700 TOTAL	AGENCY FUNDS	28,487.84
	** TOTAL **	1,883,907.48

*** PROJECT TOTALS ***

PROJECT	LINE ITEM		AMOUNT
E01 5311-FY18/19	GASUP	Garage Supplies	112.38
	MAINT	Maintenance/Repairs	300.00
	OFFUT	Office Utilities	70.30
	RAD	Radio Equipment	135.00CR
	SHAH	Tablet/Radio Contract	467.86
	TIR	Tires	648.18
	TRA	Travel/Training	60.00
		** PROJECT E01 TOTAL **	1,523.72
H01 SPORTS COMPLEX EQUIPMENT	42500	REPAIR/MAINTENANCE	1,678.33
	42600	SUPPLIES/MAINTENANCE	7.24
	42603	SMALL EQUIPMENT	339.99
	42610	GAS-FUEL	312.00
		** PROJECT H01 TOTAL **	2,337.56

*** PROJECT TOTALS ***

PROJECT	LINE ITEM		AMOUNT
H04 BASEBALL	42800	UTILITIES	465.09
		** PROJECT H04 TOTAL **	465.09
H05 SOFTBALL	42800	UTILITIES	219.67
		** PROJECT H05 TOTAL **	219.67
H06 ARENA-NORTH RINK	42600	SUPPLIES-MATERIALS	726.09
	42800	UTILITIES	1,861.35
		** PROJECT H06 TOTAL **	2,587.44
H07 PEPSI COMPLEX	42800	UTILITIES	1,131.44
		** PROJECT H07 TOTAL **	1,131.44
H10 MUNROE PARK	42800	UTILITIES	58.34
		** PROJECT H10 TOTAL **	58.34
H13 ARENA-SOUTH RINK	42500	REPAIR-MAINTENANCE	1,309.12
	42600	SUPPLIES-MAINTENANCE	240.69
		** PROJECT H13 TOTAL **	1,549.81
H50 PARKS EQUIPMENT	42610	GAS/FUEL	1,212.55
		** PROJECT H50 TOTAL **	1,212.55
H51 PARK SHOP	42600	SUPPLIES/MATERIALS	141.43
		** PROJECT H51 TOTAL **	141.43
H55 DRY RUN CREEK PARK	42800	UTILITIES	149.91
		** PROJECT H55 TOTAL **	149.91
H58 JENNEWEIN PARK	42800	UTILITIES	17.55
		** PROJECT H58 TOTAL **	17.55
H60 NORTHRIDGE PARK	42800	UTILITIES	8.80
		** PROJECT H60 TOTAL **	8.80
H61 PIONEER PARK	42800	UTILITIES	13.55
		** PROJECT H61 TOTAL **	13.55
H62 ROTARY PARK	42800	UTILITIES	15.43
		** PROJECT H62 TOTAL **	15.43

*** PROJECT TOTALS ***

PROJECT	LINE ITEM		AMOUNT
H63 VETERANS PARK	42850	UTILITES/VETERANS PARK	99.38
		** PROJECT H63 TOTAL **	99.38
H65 AMPHITHEATER	42800	UTILITIES	58.30
		** PROJECT H65 TOTAL **	58.30
H66 CAMP ARROYA	42800	UTILITIES	117.11
		** PROJECT H66 TOTAL **	117.11
H67 DAY CAMP	42800	UTILITIES	58.08
		** PROJECT H67 TOTAL **	58.08
H74 PUBLIC BEACH	42800	UTILITIES	63.57
		** PROJECT H74 TOTAL **	63.57
H76 SANDY BEACH	42800	UTILITIES	24.50
		** PROJECT H76 TOTAL **	24.50
H77 SPORTSMANS CLUB	42800	UTILITIES	28.70
		** PROJECT H77 TOTAL **	28.70
H79 LAKE PARK ACCESS AREAS	42800	UTILITIES	22.89
		** PROJECT H79 TOTAL **	22.89
H87 PATTON YOUNG	42800	UTILITIES	168.38
		** PROJECT H87 TOTAL **	168.38
J02 INDOOR AQUATIC CTR	SM-EQUIP	SUPPLIES/MATERIAL-EQUIPMENT	399.80
		** PROJECT J02 TOTAL **	399.80
J05 REC CTR CONCESSIONS	CONC SUP	CONCESSION SUPPLY	435.54
		** PROJECT J05 TOTAL **	435.54
J06 REC CTR-GENERAL BLDG	RM-EQUIP	REPAIR/MAINT-EQUIPMENT	34.67
	RM-HVAC	REPAIR/MAINT-HVAC	247.50
	SM-ELEC	SUPPLIES/MATERIAL-ELECTRICAL	25.85
	SM-EQUIP	SUPPLIES/MATERIAL-EQUIPMENT	20.99
	SM-GENER	SUPPLIES/MATERIAL-GENERAL	1,217.08
	SM-JANIT	SUPPLIES/MATERIAL-JANITORIAL	668.53
	SM-OFFIC	SUPPLIES/MATERIAL-OFFICE	15.08
		** PROJECT J06 TOTAL **	2,229.70

*** PROJECT TOTALS ***

PROJECT	LINE ITEM		AMOUNT
J08 REC CTR PUBLISHING	ICAN	PUBLISHING-ICAN	750.00
	KMIT	PUBLISHING-KMIT	615.00
	MIDCO	PUBLISHING-MIDCO	2,641.00
		** PROJECT J08 TOTAL **	4,006.00
J09 REC CTR UTILITIES	ELE/GAS	UTILITIES-ELECTRIC/GAS	3,426.44
		** PROJECT J09 TOTAL **	3,426.44
J50 OUTDOOR AQUATIC CENTER	PROF FEE	CONCESSION CERTIFICATION	200.00
		** PROJECT J50 TOTAL **	200.00
L04 103	42600	SUPPLIES MATERIALS	27.89
		** PROJECT L04 TOTAL **	27.89
L05 104	42600	SUPPLIES MATERIALS	215.71
		** PROJECT L05 TOTAL **	215.71
L06 105	42600	SUPPLIES MATERIALS	358.90
		** PROJECT L06 TOTAL **	358.90
L10 106	42500	REPAIR MAINTENANCE	168.20
	42600	SUPPLIES MATERIALS	3,673.38
		** PROJECT L10 TOTAL **	3,841.58
L12 109	42600	SUPPLIES MATERIALS	244.72
		** PROJECT L12 TOTAL **	244.72
L18 118	42600	SUPPLIES MATERIALS	33.66
		** PROJECT L18 TOTAL **	33.66
L1B 185	42500	REPAIR MAINTENANCE	487.66
		** PROJECT L1B TOTAL **	487.66
L21 121	42600	SUPPLIES MATERIALS	5,049.84
		** PROJECT L21 TOTAL **	5,049.84
L23 124	42600	SUPPLIES MATERIALS	28.89
		** PROJECT L23 TOTAL **	28.89
L24 125	42600	SUPPLIES MATERIALS	432.57
		** PROJECT L24 TOTAL **	432.57

*** PROJECT TOTALS ***

PROJECT	LINE ITEM		AMOUNT
L25 127	42600	SUPPLIES MATERIALS	3,257.48
		** PROJECT L25 TOTAL **	3,257.48
L39 140	42600	SUPPLIES MATERIALS	614.89
		** PROJECT L39 TOTAL **	614.89
L3A 950	42600	SUPPLIES SUPPLIES	483.99
		** PROJECT L3A TOTAL **	483.99
L3C 197	42600	SUPPLIES MATERIALS	1,388.94
		** PROJECT L3C TOTAL **	1,388.94
L47 148	42600	SUPPLIES MATERIALS	224.75
		** PROJECT L47 TOTAL **	224.75
L4A 951	42500	REPAIR MAINTENANCE	70.00
	42600	SUPPLIES MATERIALS	5,642.81
		** PROJECT L4A TOTAL **	5,712.81
L4C 198	42600	SUPPLIES MATERIALS	192.57
		** PROJECT L4C TOTAL **	192.57
L57 161	42600	SUPPLIES MATERIALS	70.87
		** PROJECT L57 TOTAL **	70.87
L58 162	42600	SUPPLIES MATERIALS	239.28
		** PROJECT L58 TOTAL **	239.28
L59 163	42600	SUPPLIES MATERIALS	218.70
		** PROJECT L59 TOTAL **	218.70
L5B 189	42600	SUPPLIES MATERIALS	27.16
		** PROJECT L5B TOTAL **	27.16
L68 521	42600	SUPPLIES MATERIALS	121.98
		** PROJECT L68 TOTAL **	121.98
L70 902	42600	SUPPLIES MATERIALS	205.96
		** PROJECT L70 TOTAL **	205.96

*** PROJECT TOTALS ***

PROJECT	LINE ITEM		AMOUNT
L73 905	42500	REPAIR MAINTENANCE	490.56
	42600	SUPPLIES MATERIALS	35.04
		** PROJECT L73 TOTAL **	525.60
L8B 192	42600	SUPPLIES MATERIALS	102.99
		** PROJECT L8B TOTAL **	102.99
L92 178	42600	SUPPLIES MATERIALS	147.84
		** PROJECT L92 TOTAL **	147.84
L94 920	42600	SUPPLIES MATERIALS	132.67
		** PROJECT L94 TOTAL **	132.67
L95 921	42600	SUPPLIES MATERIALS	238.11
		** PROJECT L95 TOTAL **	238.11
L97 173	42600	SUPPLIES MATERIALS	241.08
		** PROJECT L97 TOTAL **	241.08
L98 175	42600	SUPPLIES MATERIALS	11.99
		** PROJECT L98 TOTAL **	11.99
L99 176	42600	SUPPLIES MATERIALS	97.63
		** PROJECT L99 TOTAL **	97.63
L9A 182	42600	SUPPLIES MATERIALS	473.84
		** PROJECT L9A TOTAL **	473.84
X04 DECORATING	42600	SUPPLIES	99.96
		** PROJECT X04 TOTAL **	99.96

NO ERRORS

** END OF REPORT **

CITY OF MITCHELL

City Council Meeting
Agenda Item Request

The deadline for agenda items is Wednesday at noon, prior to the City Council Meeting

Meeting Date Requested:	February 18, 2025	**Requested By:**	Mark Jenniges
Desired Action of City Council:			
Amount Budgeted in current fiscal year for this item (if applicable):			
Agenda Item:	Action to Set Date for Board of Adjustment Hearing 3-3-25		

Explanation/Background of Agenda Item Requested:

Todd & Kay Long have applied for a Variance Permit for the following:

1. Minimum lot width for platted subdivision, nonresidential of 44.57' vs 100' for Lot 3A, Block 1
2. Minimum lot width for platted subdivision, nonresidential of 44.57' vs 100' for Lot 4A, Block 1
3. Minimum lot width for platted subdivision, nonresidential of 44.57' vs 100' for Lot 3A, Block 4.

This is located for the shelterbelt west of 40692 Chase Ct, to be legally described Lots 3A and 4A, Block 1 and Lot 3A, Block 4, all of Circle K Ranch Second Addition, a subdivision of the SE 1/4 of Section 6, T 103 N, R 60 W of the 5th P.M., Davison County, South Dakota. The property is zoned UD Urban Development District.

Todd & Nancy Boyd have applied for a Variance Permit for rear yard setback (road side) of 17'-10" vs 30'. This is located at 155 S Harmon Dr, legally described as Lots 78 & 79 and the East 26' of Lot 80 of Indian Head Subdivision Lake Mitchell Development Plan, SW ¼ of Section 4, T 103 N, R 60 W of the 5th P.M., City of Mitchell, Davison County, South Dakota. The property is zoned RL Lake Residential District.

TO: THE MITCHELL PLANNING COMMISSION AND CITY COUNCIL OR BOARD OF ADJUSTMENT, THE CITY OF MITCHELL, DAVISON COUNTY, SOUTH DAKOTA.

The undersigned applicant(s) and owner(s) is hereby making an application pursuant to the provisions of the City of Mitchell Zoning Code.

The names and addresses of the current property owners within one hundred and forty feet (140') of the applicant's property (excluding streets and alleys) will be notified upon the filing of this application, plats being the exception.

Applicant(s) request that dates be set for public hearings before the Mitchell Planning Commission and City Council or City Board of Adjustment. Furthermore, the applicant(s) request the City of Mitchell to publish the appropriate notice(s) in accordance with the City of Mitchell's Ordinances.

☐ **Rezoning** *$250 application due with the application.*

- Applicant is request to rezone property from Click or tap here to enter text. District to Click or tap here to enter text. District.

☒ **Variance** *$150 application fee due with application.*

- Description of Variance: 1. Minimum lot width for platted subdivision, nonresidential of 44.57' vs 100' for Lot 3A, Block 1. 2. Minimum lot width for platted subdivision, nonresidential of 44.57' vs 100' for Lot 4A, Block 1. 3. Minimum lot width for platted subdivision, nonresidential of 44.57' vs 100' for Lot 3A, Block 4.
- Description of Hardship: Landlocked property within subdivision that had master plan previously approved but the trees were never platted.

☐ **Conditional Use Permit** *$150 application fee due with application*

- Description of Conditional Use: Click or tap here to enter text.

☐ **Plat Application** *$100 application fee due with application*

This Application is for the following described real property:

Legal Description: **To be platted as-Lots 3A and 4A, Block 1 and Lot 3A, Block 4, all of Circle K Ranch Second Addition, a subdivision of the SE 1/4 of Section 6, T 103 N, R 60 W of the 5th P.M., Davison County, South Dakota**

Property Address: **Property to west of 40692 Chase Ct**

Dated this 30th of January , 2025.

Todd & Kay Long-Purchase Agreement with 4K Land Group LLC
APPLICANT

4K Land Group LLC
OWNER

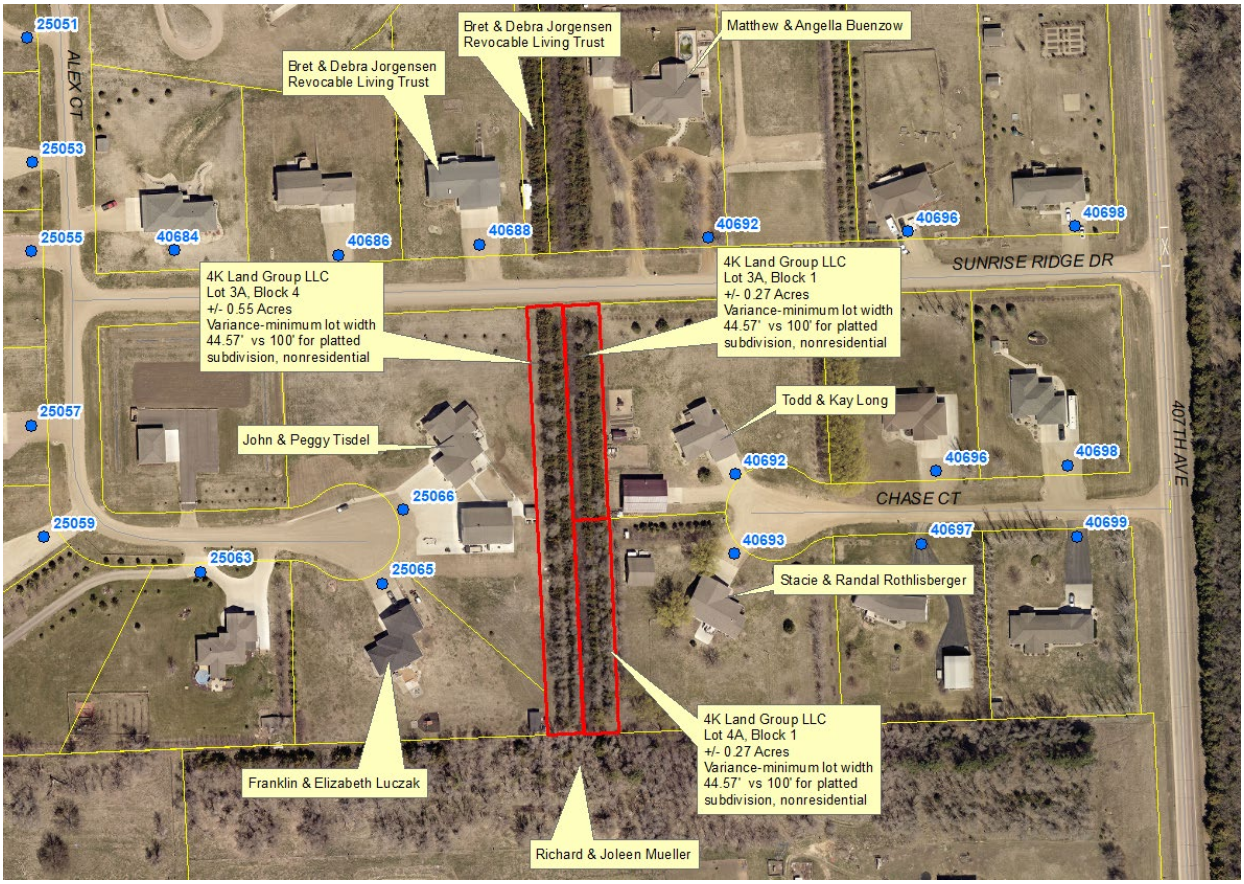
25051
ALEX CT
25053
25055
40684
40686
40688
40692
40696
40698
SUNRISE RIDGE DR
Bret & Debra Jorgensen
Revocable Living Trust
Bret & Debra Jorgensen
Revocable Living Trust
Matthew & Angella Buenzow
4K Land Group LLC
Lot 3A, Block 4
+/- 0.55 Acres
Variance-minimum lot width
44.57' vs 100' for platted
subdivision, nonresidential
4K Land Group LLC
Lot 3A, Block 1
+/- 0.27 Acres
Variance-minimum lot width
44.57' vs 100' for platted
subdivision, nonresidential
25057
John & Peggy Tisdel
Todd & Kay Long
40692
40696
40698
CHASE CT
407TH AVE
25066
25059
25063
25065
40693
40697
40699
Stacie & Randal Rothlisberger
4K Land Group LLC
Lot 4A, Block 1
+/- 0.27 Acres
Variance-minimum lot width
44.57' vs 100' for platted
subdivision, nonresidential
Franklin & Elizabeth Luczak
Richard & Joleen Mueller

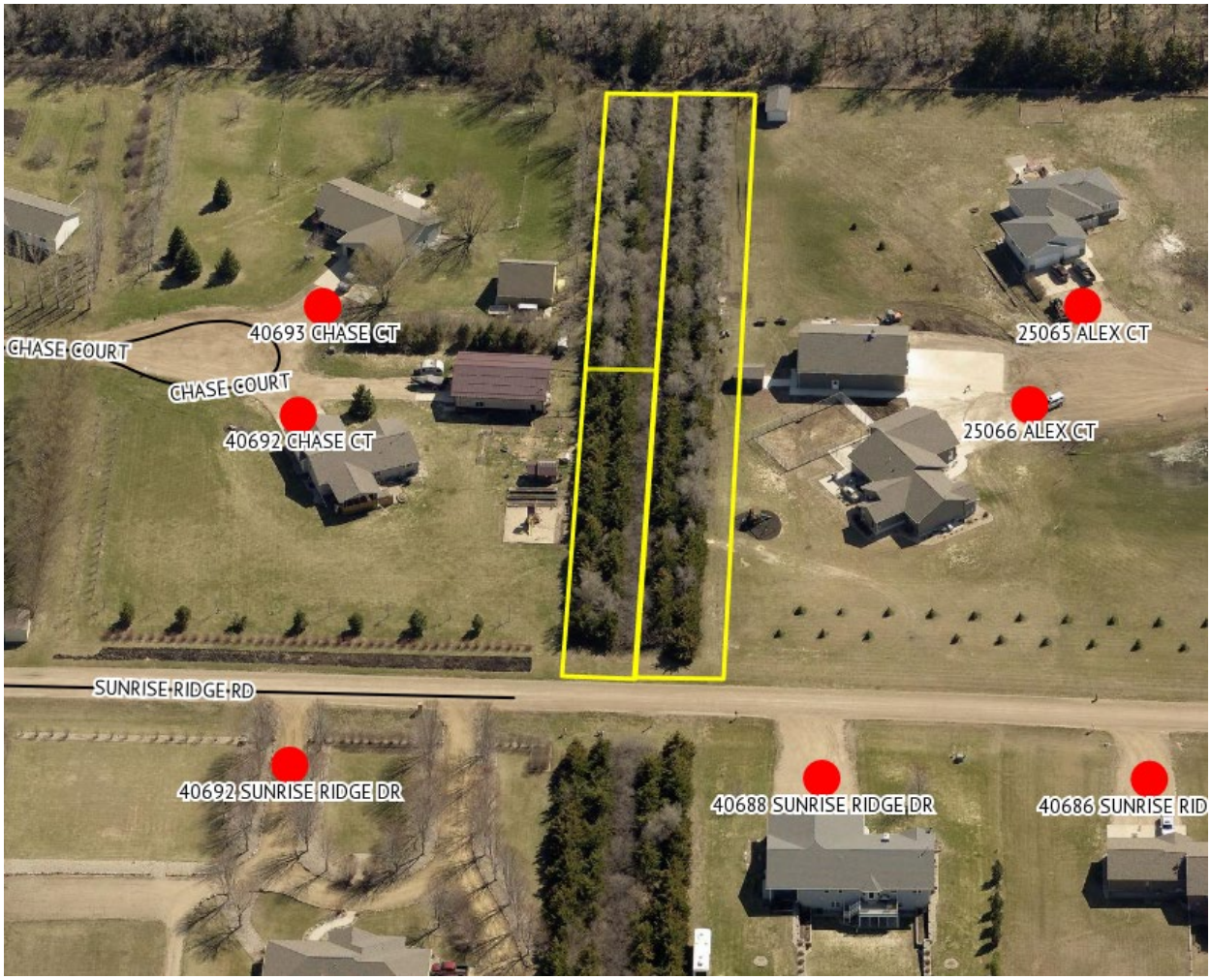
40693 CHASE CT
CHASE COURT
CHASE COURT
40692 CHASE CT
25065 ALEX CT
25066 ALEX CT
SUNRISE RIDGE RD
40692 SUNRISE RIDGE DR
40688 SUNRISE RIDGE DR
40686 SUNRISE RID

City of Mitchell
SOUTH DAKOTA

TO: THE MITCHELL PLANNING COMMISSION AND CITY COUNCIL OR BOARD OF ADJUSTMENT, THE CITY OF MITCHELL, DAVISON COUNTY, SOUTH DAKOTA.

The undersigned applicant(s) and owner(s) is hereby making an application pursuant to the provisions of the City of Mitchell Zoning Code.

The names and addresses of the current property owners within one hundred and forty feet (140') of the applicant's property (excluding streets and alleys) will be notified upon the filing of this application, plats being the exception.

Applicant(s) request that dates be set for public hearings before the Mitchell Planning Commission and City Council or City Board of Adjustment. Furthermore, the applicant(s) request the City of Mitchell to publish the appropriate notice(s) in accordance with the City of Mitchell's Ordinances.

☐ **Rezoning** *$250 application due with the application.*

- Applicant is request to rezone property from Click or tap here to enter text. District to Click or tap here to enter text. District.

☒ **Variance** *$150 application fee due with application.*

- Description of Variance: Rear yard setback (road side) of 17'-10" vs 30'
- Description of Hardship: Applicant would like to use the same rear yard setback as previous house to keep the new house and deck out of the 100 year floodplain.

☐ **Conditional Use Permit** *$150 application fee due with application*

- Description of Conditional Use: Click or tap here to enter text.

☐ **Plat Application** *$100 application fee due with application*

This Application is for the following described real property:

Legal Description: **Lots 78 & 79 and the East 26' of Lot 80 of Indian Head Subdivision Lake Mitchell Development Plan, SW ¼ of Section 4, T 103 N, R 60 W of the 5th P.M., City of Mitchell, Davison County, South Dakota.**

Property Address: **155 S Harmon Drive**

Dated this 3rd of February, 2025.

APPLICANT

Todd & Nancy Boyd
OWNER

Bart & Nikki Fredericksen
City of Mitchell
Rick Deschepper
Rodger Musick
Cheryl Oleske
Phillip & Kathleen Kiregaard
Boyd & Kay Reimnitz
Donald & Barbara Young
Lurken Living Trust
Mark Graham Recov Living Trust
Gopal Vyas Trust
Todd & Nancy Boyd
Variance Permit
Rear yard (road side) setback
of 17'-10" vs 30'.

155 S HARMON DR
159 S HARMON DR

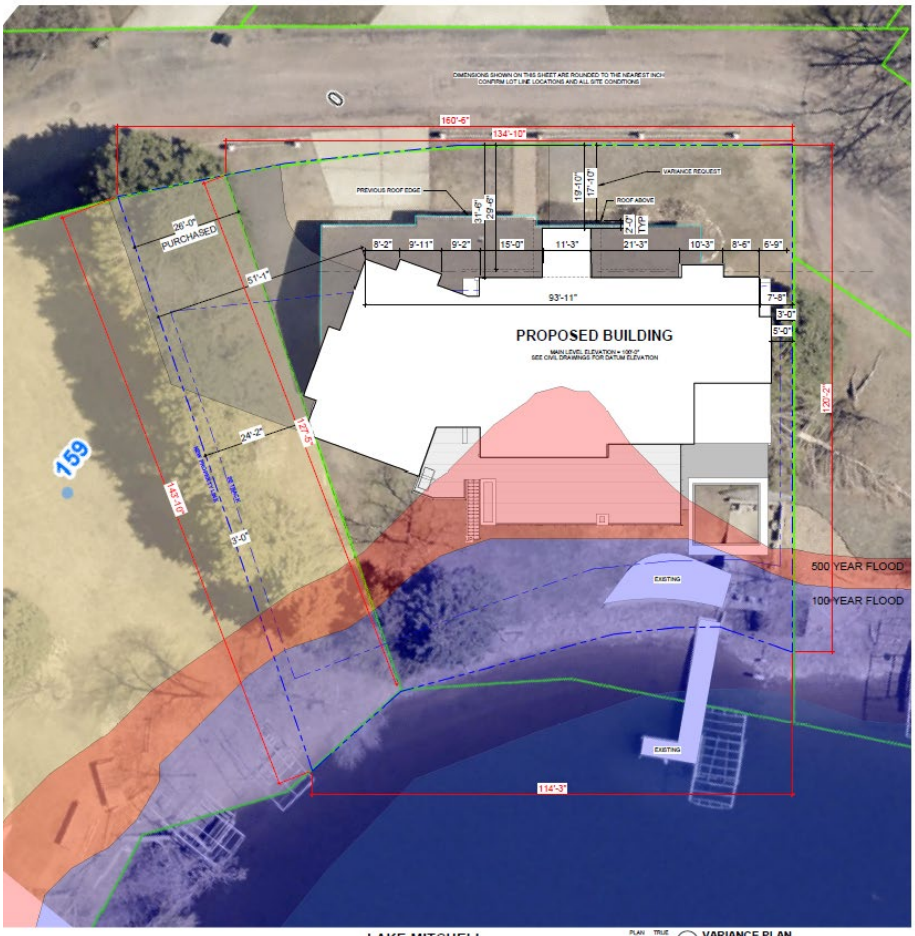

LAKE MITCHELL

1 VARIANCE PLAN
1" = 10'-0"

DRAFT ONLY
01-31-2025

BOYD HOME
155 S HARMON
MITCHELL, SD

SITE

Revision Schedule

No.	Description	Date

Drawn By: SW
Checked By: xx
Date: 01-31-2025

A1.1

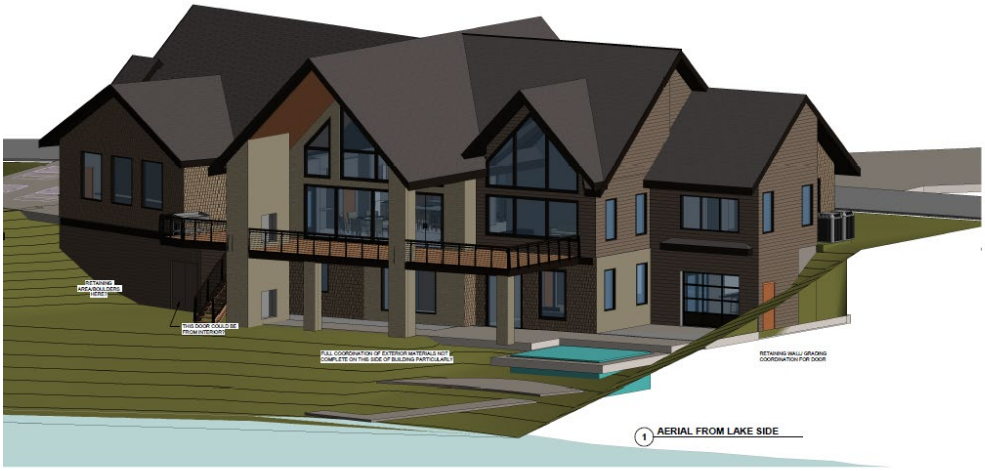

1 AERIAL FROM LAKE SIDE

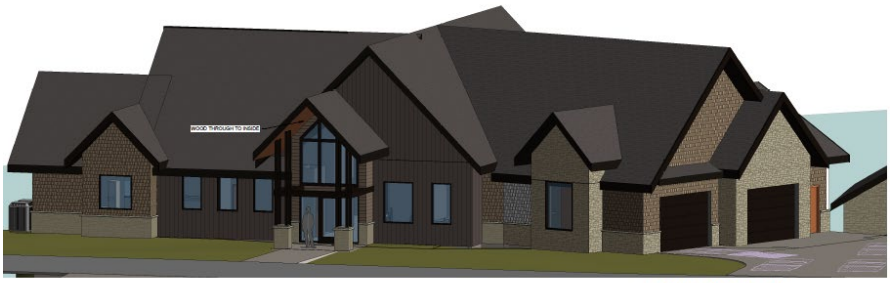

2 AERIAL FROM STREET SIDE

DIGITAL USERS:
CLICK HERE FOR FLOOR PLAN

DRAFT ONLY
01-22-2025

BOYD HOME
155 S HARMON
MITCHELL, SD

EXTERIOR VIEWS

Revision Schedule

No.	Description	Date

Drawn By: SW
Checked By: xx
Date: 01-22-2025

A3.1

CITY OF MITCHELL

City Council Meeting
Agenda Item Request

The deadline for agenda items is Wednesday at noon, prior to the City Council Meeting

Meeting Date Requested:	February 18, 2025	**Requested By:**	Mark Jenniges
Desired Action of City Council:			
Amount Budgeted in current fiscal year for this item (if applicable):			
Agenda Item:	Action to Approve Resolution #R2025-11,Plat of Lots 2B, 2C and 2D, a subdivision of Lot 2, Block 4 of Westwood First Addition, a subdivision of the NW 1/4 of Section 16, T 103 N, R 60 W of the 5th P.M., portions of which lie within the City of Mitchell, Davison County, South Dakota		
Explanation/Background of Agenda Item Requested:	Plat of Lots 2B, 2C and 2D, a subdivision of Lot 2, Block 4 of Westwood First Addition, a subdivision of the NW 1/4 of Section 16, T 103 N, R 60 W of the 5th P.M., portions of which lie within the City of Mitchell, Davison County, South Dakota; as requested by CJM Consulting Inc. Planning Commission motioned to approve; all present voting aye. Motion carried. See Planning Commission Unsigned Minutes 02-10-25.		

RESOLUTION #R2025-11

WHEREAS, it appears that the City Planning Commission of the City of Mitchell, South Dakota, did duly consider and did recommend the approval and adoption of the hereinafter described plat, at its meeting held on the 10th day of February, 2025; and

WHEREAS, it appears from an examination of the PLAT OF LOTS 2B, 2C AND 2D, A SUBDIVISION OF LOT 2, BLOCK 4 OF WESTWOOD FIRST ADDITION, A SUBDIVISION OF THE NW 1/4 OF SECTION 16, T 103 N, R 60 W OF THE 5TH P.M., PORTIONS OF WHICH LIE WITHIN THE CITY OF MITCHELL, DAVISON COUNTY, SOUTH DAKOTA, as prepared by Jeremy A. Wolbrink, a duly licensed Land Surveyor in and for the State of South Dakota, that said is in accordance with the system of streets and alleys set forth in the master plan adopted by the City Planning Commission of the City of Mitchell, South Dakota, and that such plat has been prepared according to law;

THEREFORE, be it resolved by the City Council of Mitchell, South Dakota that the PLAT OF LOTS 2B, 2C AND 2D, A SUBDIVISION OF LOT 2, BLOCK 4 OF WESTWOOD FIRST ADDITION, A SUBDIVISION OF THE NW 1/4 OF SECTION 16, T 103 N, R 60 W OF THE 5TH P.M., PORTIONS OF WHICH LIE WITHIN THE CITY OF MITCHELL, DAVISON COUNTY, SOUTH DAKOTA, as prepared by Jeremy A. Wolbrink, be and the same is approved and the description set forth therein and the accompanying surveyor's certificate shall prevail.

I, Michelle Bathke, Finance Officer of the City of Mitchell, South Dakota, do hereby certify that the foregoing resolution was passed by the City of Mitchell, South Dakota, at a meeting thereof held on the 18th day of February, 2025.

_____

MAYOR

ATTEST:

_____

FINANCE OFFICER

{SEAL}

CJM Consulting Inc
CJM Consulting Inc
CJM Consulting Inc
CJM Consulting Inc
Lot 2C
+/- 1.29 Acres
Lot 2D
+/- 0.51 Acres
20' Wide Access Easement
for Ingress & Egress
20' Wide Access Easement
for Ingress & Egress
Lot 2B
+/- 2.93 Acres
CJM Consulting Inc
ATV Holdings Inc
Kayla Lux
Little Learners Daycare
City of Mitchell
1308
COMMERCE ST
N SD HWY 37
N SD HWY 37
W 15TH AVE

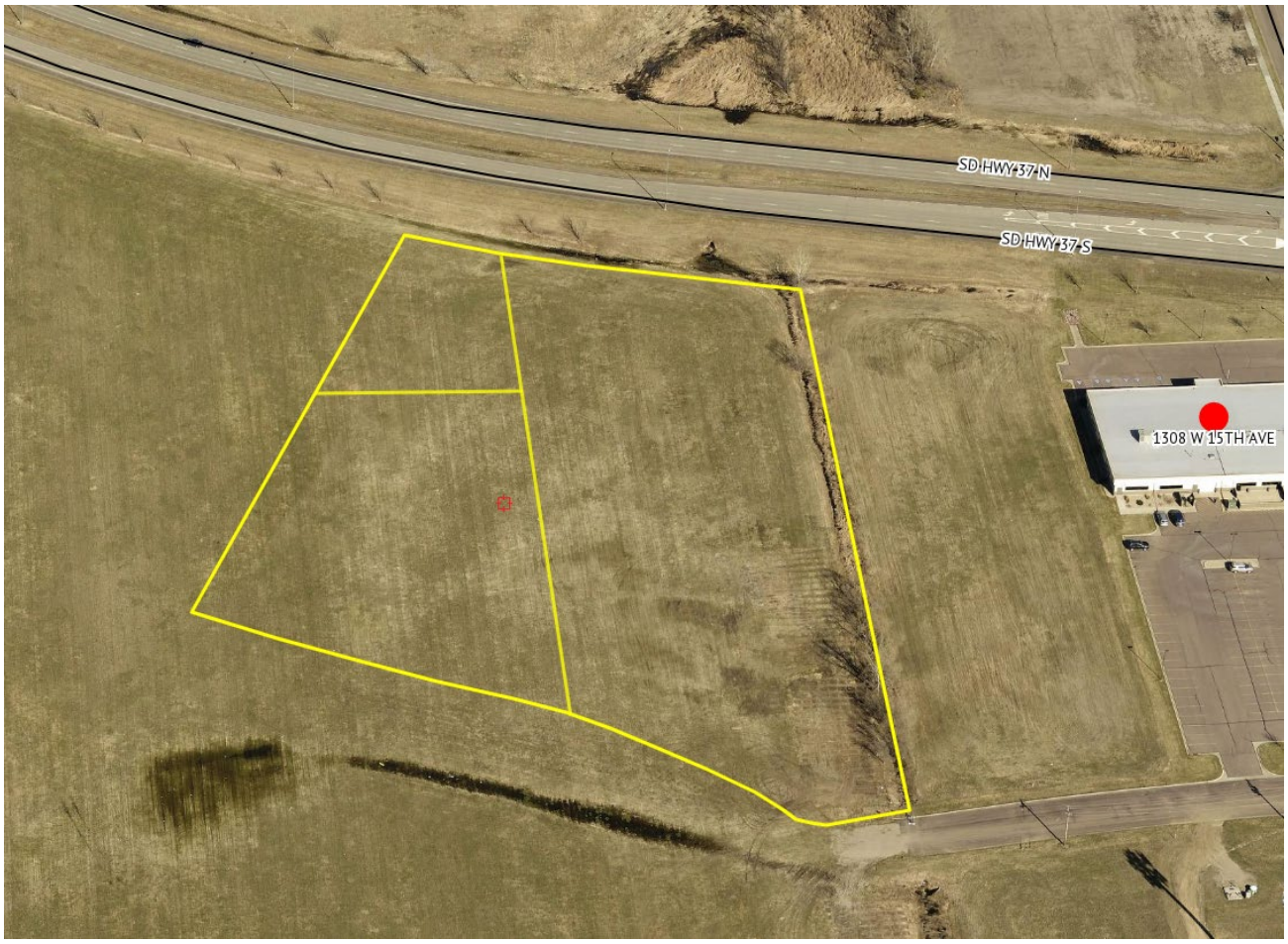
SD HWY 37 N
SD HWY 37 S
1308 W 15TH AVE

1 Inch = 100 Feet

LEGEND

- ● = FOUND IRON MONUMENT
- O = SET 5/8" X 18" REBAR WITH PLASTIC CAP NO. 13714
- 100' (P) = PLATTED BEARING OR DISTANCE
- 100' = MEASURED BEARING OR DISTANCE
- □ = SET NAIL
- △ = SET SURVEY SPIKE
- 4.00 CH (P) = PLATTED DISTANCE IN CHAINS
- ■ = FOUND NAIL
- ◇ = SET 3/8" x 12" SPIKE W/WASHER JAW-13714
- WM = WITNESS MONUMENT
- Chd L = CHORD LENGTH
- Chd B = CHORD BEARING

PREPARED BY: JEREMY A. WOLBRINK, R.L.S.
2100 NORTH SANBORN BLVD. - P.O. BOX 398
MITCHELL, SOUTH DAKOTA 57301
PHONE: (605) 996-7761

COORDINATE SYSTEM IS SOUTH DAKOTA SOUTH ZONE, STATE PLANE - NORTH AMERICAN DATUM 1983 - GEOID 18. GRID BEARINGS AND GROUND DISTANCES ARE SHOWN.

NOTE:
THIS SURVEY WAS PERFORMED WITHOUT THE BENEFIT OF A TITLE REPORT OR TITLE COMMITMENT. EASEMENTS OF RECORD WERE NOT RESEARCHED AND ARE NOT SHOWN UNLESS OTHERWISE NOTED.

SEC. 16, T 103 N, R 60 W

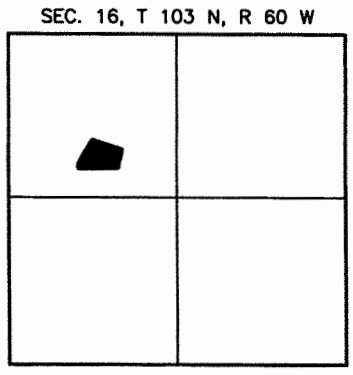

LOCATION MAP
SCALE: 1" = 3000'

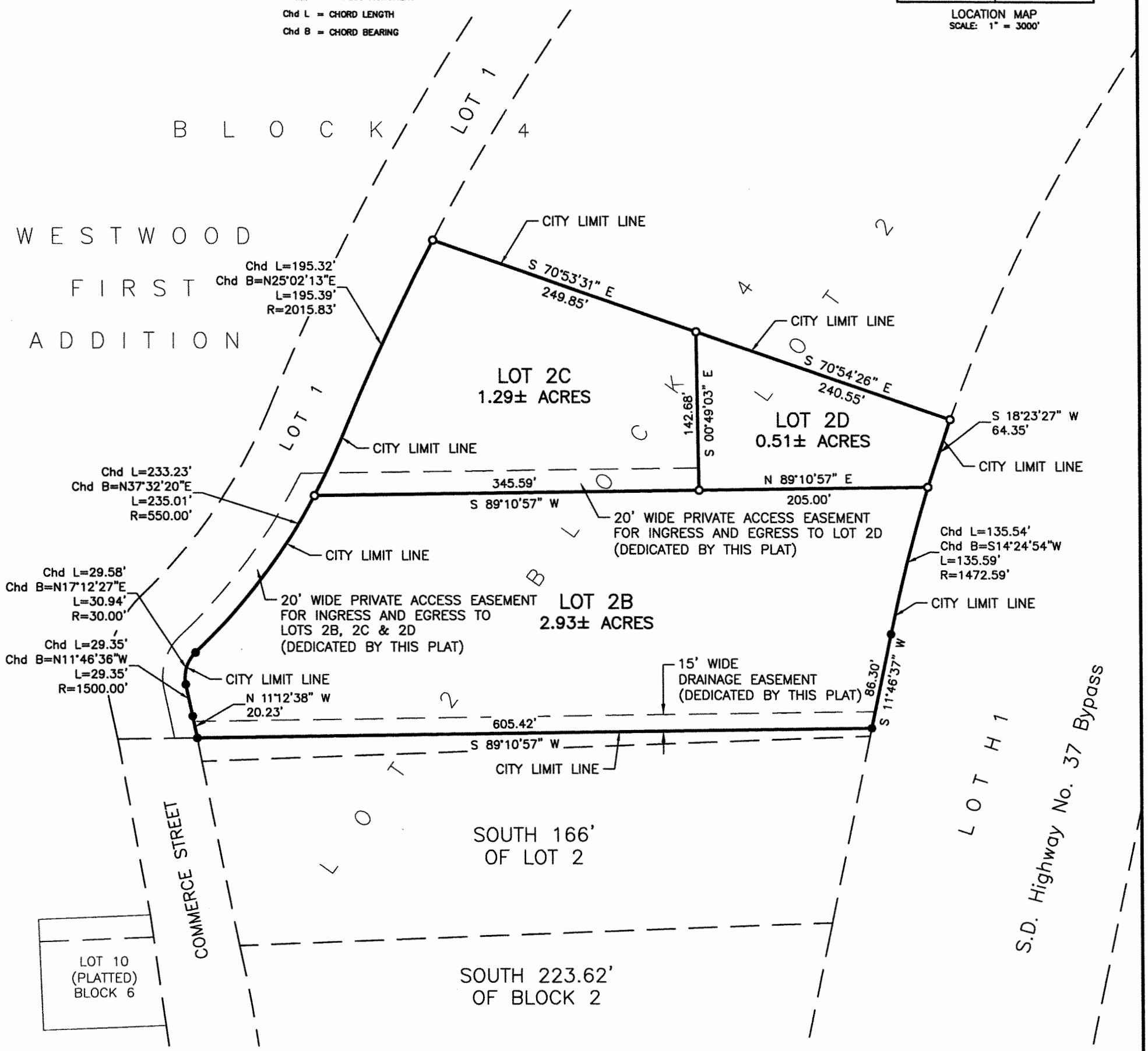

A PLAT OF LOTS 2B, 2C, AND 2D, A SUBDIVISION OF LOT 2, BLOCK 4 OF WESTWOOD FIRST ADDITION, A SUBDIVISION OF THE NW 1/4 OF SECTION 16, T 103 N, R 60 W OF THE 5TH P.M., PORTIONS OF WHICH LIE WITHIN THE CITY OF MITCHELL, DAVISON COUNTY, SOUTH DAKOTA

SURVEYOR'S CERTIFICATE

I, Jeremy A. Wolbrink, the undersigned, do hereby certify that I am a Registered Land Surveyor in the State of South Dakota. At the request of CJM Consulting, Inc., a South Dakota corporation, as owner, and under its direction for purposes indicated therein, I did on or prior to January 20, 2025, survey those parcels of land described as follows: LOTS 2B, 2C, AND 2D, A SUBDIVISION OF LOT 2, BLOCK 4 OF WESTWOOD FIRST ADDITION, A SUBDIVISION OF THE NW 1/4 OF SECTION 16, T 103 N, R 60 W OF THE 5TH P.M., PORTIONS OF WHICH LIE WITHIN THE CITY OF MITCHELL, DAVISON COUNTY, SOUTH DAKOTA.

In my professional opinion and to the best of my knowledge, information and belief, the within and foregoing plat is true and correct.

Dated this 5TH day of FEBRUARY, 2025.

Registered Land Surveyor #SD13714

REGISTERED LAND SURVEYOR
REG. NO. 13714
JEREMY A. WOLBRINK
SOUTH DAKOTA
2-5-25

SPN & Associates
Engineers, Planners and Surveyors
2100 North Sanborn Blvd. - P.O. Box 398 Mitchell, South Dakota 57301
Phone: (605) 996-7761 Fax: (605) 996-0015

A PLAT OF LOTS 2B, 2C, AND 2D, A SUBDIVISION OF LOT 2, BLOCK 4 OF WESTWOOD FIRST ADDITION, A SUBDIVISION OF THE NW 1/4 OF SECTION 16, T 103 N, R 60 W OF THE 5TH P.M., PORTIONS OF WHICH LIE WITHIN THE CITY OF MITCHELL, DAVISON COUNTY, SOUTH DAKOTA

OWNER'S CERTIFICATE, DEDICATION AND AGREEMENT OF PROTECTION OF WATER

KNOW ALL MEN BY THESE PRESENTS that I, the undersigned, hereby certify that CJM Consulting, Inc., a South Dakota corporation, is the absolute and unqualified owner of all of the land included in the within and foregoing plat; the plat is of a parcel of ground located in LOT 2, BLOCK 4 OF WESTWOOD FIRST ADDITION, A SUBDIVISION OF THE NW 1/4 OF SECTION 16, T 103 N, R 60 W OF THE 5TH P.M., PORTIONS OF WHICH LIE WITHIN THE CITY OF MITCHELL, DAVISON COUNTY, SOUTH DAKOTA; that the plat has been made at the request of CJM Consulting, Inc., a South Dakota corporation, and under its direction for the purposes indicated therein; which said property as so surveyed and platted shall hereafter be known as LOTS 2B, 2C, AND 2D, A SUBDIVISION OF LOT 2, BLOCK 4 OF WESTWOOD FIRST ADDITION, A SUBDIVISION OF THE NW 1/4 OF SECTION 16, T 103 N, R 60 W OF THE 5TH P.M., PORTIONS OF WHICH LIE WITHIN THE CITY OF MITCHELL, DAVISON COUNTY, SOUTH DAKOTA, as shown by this plat; and CJM Consulting, Inc., a South Dakota corporation, hereby dedicates to the public, for public use forever as such, the streets and alleys, if any, as shown and marked on said plat; and that development of the land included within the boundaries of said Lots 2B, 2C, and 2D shall conform to all existing applicable zoning, subdivision, erosion, sediment control and drainage regulations and ordinances; further that there now exists Commerce Street and S.D. Highway No. 37 Bypass; furthermore this plat dedicates a private access easement for ingress and egress as shown. Pursuant to SDCL 11-3-8.1 and 11-3-8.2 the developer of the property described within this plat shall be responsible for protecting any waters of the state located adjacent to or within such platted area from pollution from sewage from such subdivision and shall, in prosecution of such protections conform to and follow all regulations of the South Dakota Department of Agriculture and Natural Resources relating to the same. Additionally, the developer of the property described within this plat shall be liable for any pollution that occurs from failure to execute such protections or follow such regulations, exception being those lots in subdivisions that show documentation that wastewater drainage shall be connected to a municipal system.

IN WITNESS WHEREOF, I have hereunto set my hand this _____ day of _____, 2025.

_____
Charles J. Mauszycki, Jr., Vice President of CJM Consulting, Inc.,
a South Dakota corporation

CORPORATION ACKNOWLEDGMENT

STATE OF SOUTH DAKOTA)
)SS
COUNTY OF DAVISON)

On this, the _____ day of _____, 2025, before me, _____, the undersigned officer, personally appeared Charles J. Mauszycki, Jr., of CJM Consulting, Inc., a South Dakota corporation, and that he, as such Vice President, being authorized so to do, executed the foregoing instrument for the purposes therein contained, by signing the name of the corporation by himself as Vice President.

IN WITNESS WHEREOF, I hereunto set my hand and official seal.

_____
Notary Public, South Dakota
My Commission Expires:_____

RESOLUTION OF CITY PLANNING COMMISSION

WHEREAS, the plat of LOTS 2B, 2C, AND 2D, A SUBDIVISION OF LOT 2, BLOCK 4 OF WESTWOOD FIRST ADDITION, A SUBDIVISION OF THE NW 1/4 OF SECTION 16, T 103 N, R 60 W OF THE 5TH P.M., PORTIONS OF WHICH LIE WITHIN THE CITY OF MITCHELL, DAVISON COUNTY, SOUTH DAKOTA, prepared by Jeremy A. Wolbrink, duly licensed Land Surveyor in and for the State of South Dakota, heretofore filed in the office of the City Finance Officer of Mitchell, South Dakota, has been submitted to the City Planning Commission of the said City of Mitchell, South Dakota; and

WHEREAS, the City Planning Commission, in regular meeting assembled, had duly considered said plat and finds as a fact that said plat is in conformity and does not conflict with the Master Plan for the City of Mitchell, South Dakota, heretofore adopted by this Commission;

NOW THEREFORE, be it resolved by the City Planning Commission of Mitchell, South Dakota, that the plat of LOTS 2B, 2C, AND 2D, A SUBDIVISION OF LOT 2, BLOCK 4 OF WESTWOOD FIRST ADDITION, A SUBDIVISION OF THE NW 1/4 OF SECTION 16, T 103 N, R 60 W OF THE 5TH P.M., PORTIONS OF WHICH LIE WITHIN THE CITY OF MITCHELL, DAVISON COUNTY, SOUTH DAKOTA, prepared by Jeremy A. Wolbrink, a Land Surveyor, be and the same is hereby approved and its adoption by the City Council of the City of Mitchell, South Dakota, is hereby recommended.

The undersigned does hereby certify that the foregoing resolution was passed by the City Planning Commission of Mitchell, South Dakota, at a meeting thereof held on the _____ day of _____, 2025.

_____
Chairperson/Vice Chairperson of the City of Mitchell
Planning Commission

REGISTERED LAND SURVEYOR
13714
JEREMY A.
WOLBRINK
SOUTH DAKOTA
2-5-25

SPN & Associates
Engineers, Planners and Surveyors
2100 North Sanborn Blvd. - P.O. Box 398 Mitchell, South Dakota 57301
Phone: (605) 996-7761 Fax: (605) 996-0015

A PLAT OF LOTS 2B, 2C, AND 2D, A SUBDIVISION OF LOT 2, BLOCK 4 OF WESTWOOD FIRST ADDITION, A SUBDIVISION OF THE NW 1/4 OF SECTION 16, T 103 N, R 60 W OF THE 5TH P.M., PORTIONS OF WHICH LIE WITHIN THE CITY OF MITCHELL, DAVISON COUNTY, SOUTH DAKOTA

RESOLUTION OF CITY COUNCIL

WHEREAS, it appears that the City Planning Commission of the City of Mitchell, South Dakota, did duly consider and did recommend the approval and adoption of the hereinafter described plat, at its meeting held on the _____ day of _____, 2025; and

WHEREAS, it appears from an examination of the plat of LOTS 2B, 2C, AND 2D, A SUBDIVISION OF LOT 2, BLOCK 4 OF WESTWOOD FIRST ADDITION, A SUBDIVISION OF THE NW 1/4 OF SECTION 16, T 103 N, R 60 W OF THE 5TH P.M., PORTIONS OF WHICH LIE WITHIN THE CITY OF MITCHELL, DAVISON COUNTY, SOUTH DAKOTA, as prepared by Jeremy A. Wolbrink, a duly licensed Land Surveyor in and for the State of South Dakota, that said plat is in accordance with the system of streets and alleys set forth in the Master Plan adopted by the City Planning Commission of the City of Mitchell, South Dakota, and that such plat has been prepared according to law;

THEREFORE, be it resolved by the City Council of Mitchell, South Dakota, that the plat of LOTS 2B, 2C, AND 2D, A SUBDIVISION OF LOT 2, BLOCK 4 OF WESTWOOD FIRST ADDITION, A SUBDIVISION OF THE NW 1/4 OF SECTION 16, T 103 N, R 60 W OF THE 5TH P.M., PORTIONS OF WHICH LIE WITHIN THE CITY OF MITCHELL, DAVISON COUNTY, SOUTH DAKOTA, prepared by Jeremy A. Wolbrink, be and the same is hereby approved and the description set forth therein and the accompanying surveyor's certificate shall prevail.

The undersigned does hereby certify that the foregoing resolution was passed by the City of Mitchell, South Dakota, at a meeting held on the _____ day of _____, 2025.

_____
Finance Officer/Deputy Finance Officer of the City of Mitchell

RESOLUTION OF COUNTY PLANNING COMMISSION

WHEREAS, the plat of LOTS 2B, 2C, AND 2D, A SUBDIVISION OF LOT 2, BLOCK 4 OF WESTWOOD FIRST ADDITION, A SUBDIVISION OF THE NW 1/4 OF SECTION 16, T 103 N, R 60 W OF THE 5TH P.M., PORTIONS OF WHICH LIE WITHIN THE CITY OF MITCHELL, DAVISON COUNTY, SOUTH DAKOTA, prepared by Jeremy A. Wolbrink, duly licensed Land Surveyor in and for the State of South Dakota, heretofore filed in the office of the County Auditor of Davison County, South Dakota, has been submitted to the County Planning Commission of the said County of Davison, South Dakota; and

WHEREAS, the County Planning Commission, in regular meeting assembled, had duly considered said plat and finds as a fact that said plat is in conformity and does not conflict with the Master Plan for the County of Davison, South Dakota, heretofore adopted by this Commission;

NOW THEREFORE, be it resolved by the County Planning Commission of Davison County, South Dakota, that the plat of LOTS 2B, 2C, AND 2D, A SUBDIVISION OF LOT 2, BLOCK 4 OF WESTWOOD FIRST ADDITION, A SUBDIVISION OF THE NW 1/4 OF SECTION 16, T 103 N, R 60 W OF THE 5TH P.M., PORTIONS OF WHICH LIE WITHIN THE CITY OF MITCHELL, DAVISON COUNTY, SOUTH DAKOTA, prepared by Jeremy A. Wolbrink, a Land Surveyor, be and the same is hereby approved and its adoption by the Board of Commissioners of the County of Davison, South Dakota, is hereby recommended.

The undersigned hereby certifies that the foregoing resolution was passed by the County Planning Commission of Davison County, South Dakota, at a meeting thereof held on the _____ day of _____, 2025.

_____
Chairperson/Vice-Chairperson of Davison County Planning Commission

RESOLUTION BY BOARD OF COUNTY COMMISSIONERS

Be it resolved by the Board of County Commissioners of Davison County, South Dakota, that the plat of LOTS 2B, 2C, AND 2D, A SUBDIVISION OF LOT 2, BLOCK 4 OF WESTWOOD FIRST ADDITION, A SUBDIVISION OF THE NW 1/4 OF SECTION 16, T 103 N, R 60 W OF THE 5TH P.M., PORTIONS OF WHICH LIE WITHIN THE CITY OF MITCHELL, DAVISON COUNTY, SOUTH DAKOTA, which has been submitted for examination pursuant to law, is hereby approved and the County Auditor is hereby authorized and directed to endorse on such plat a copy of this Resolution and certify the same.

Dated this _____ day of _____, 2025.

_____
Chairperson/Vice-Chairperson, Board of County Commissioners
of Davison County

AUDITOR'S CERTIFICATE

The undersigned does hereby certify that the above resolution was adopted by the Board of County Commissioners of Davison County, South Dakota, at a regular meeting held on _____, 2025, approving the above-named plat.

_____
Auditor/Deputy Auditor, Davison County

REGISTERED LAND SURVEYOR
REG. NO.
13714
JEREMY A.
WOLBRINK
SOUTH DAKOTA
2-5-25

SPN & Associates
Engineers, Planners and Surveyors
2100 North Sanborn Blvd. - P.O. Box 398 Mitchell, South Dakota 57301
Phone: (605) 996-7761 Fax: (605) 996-0015

A PLAT OF LOTS 2B, 2C, AND 2D, A SUBDIVISION OF LOT 2, BLOCK 4 OF WESTWOOD FIRST ADDITION, A SUBDIVISION OF THE NW 1/4 OF SECTION 16, T 103 N, R 60 W OF THE 5TH P.M., PORTIONS OF WHICH LIE WITHIN THE CITY OF MITCHELL, DAVISON COUNTY, SOUTH DAKOTA

CERTIFICATE OF HIGHWAY AUTHORITY

No access to South Dakota Highway No. 37 Bypass is approved. This certificate does not replace the need for any permits required by law to establish the precise access location, including permit requirements set forth in Administrative Rule of South Dakota 70:09:01:02.

By:_____ Title:_____ Date:_____
Highway or Street Authority

CERTIFICATE OF COUNTY TREASURER

The undersigned does hereby certify that all taxes which would, if not paid, be liens upon any of the land included in the within and foregoing plat, as shown by the records of this office, have been fully paid.

_____ _____
Treasurer/Deputy Treasurer of Davison County Date

DIRECTOR OF EQUALIZATION

The undersigned does hereby certify that a copy of the plat of LOTS 2B, 2C, AND 2D, A SUBDIVISION OF LOT 2, BLOCK 4 OF WESTWOOD FIRST ADDITION, A SUBDIVISION OF THE NW 1/4 OF SECTION 16, T 103 N, R 60 W OF THE 5TH P.M., PORTIONS OF WHICH LIE WITHIN THE CITY OF MITCHELL, DAVISON COUNTY, SOUTH DAKOTA, has been received by me and is filed in this office.

_____ _____
Director of Equalization/Deputy Director of Equalization of Davison County Date

REGISTER OF DEEDS

STATE OF SOUTH DAKOTA)
)SS
COUNTY OF DAVISON)

FILED for record this _____ day of _____, 2025, at _____, and recorded in Book _____ of Plats on Page _____ therein and recorded on Microfilm Number _____.

_____ By_____
Register of Deeds, Davison County Deputy

REGISTERED LAND SURVEYOR
13714
JEREMY A.
WOLBRINK
SOUTH DAKOTA
2-5-25

SPN & Associates
Engineers, Planners and Surveyors
2100 North Sanborn Blvd. - P.O. Box 398 Mitchell, South Dakota 57301
Phone: (605) 996-7761 Fax: (605) 996-0015

CITY OF MITCHELL

City Council Meeting
Agenda Item Request

The deadline for agenda items is Wednesday at noon, prior to the City Council Meeting

Meeting Date Requested: February 18, 2025 **Requested By:**

Desired Action of City Council: Approval of Corn Palace Seating from Combined Building Specialities.

Amount Budgeted in current fiscal year for this item (if applicable): n/a- This would be a supplemental budget request in March.

Agenda Item: Action to Proceed with Replacement of Corn Palace Seating with Hussy Fusion Seats from Combined Building Specialties off of the Sourcewell Contract #81523

Explanation/Background of Agenda Item Requested: Mayor Jordan Hanson & the Mitchell City Council have been reviewing options for replacement of the seating in the Corn Palace including a full presentation on both options at the last City Council meeting. A committee met to review the options and put a recommendation and final budget proposal together for this project. Based on that review and discussion, the committee recommended that the City Council move forward with the purchase of the Hussy Fusion Seats off of the publicly bid Sourcewell contract. The documentation for the publicly bid contract is included with the packet, and the proposed budget is shown below.

Corn Palace Seating Replacement

Aisle Handrail & ADA Design	$	19,700
Handrails/ADA Platform	$	80,000
Removal of existing seats/patching	$	50,000
Seating - Hussy Fusion Chair with Padded Seat & Back.	$	374,880
Added padding to seat (overtime Weave)	$	23,000
Contingency	$	20,000
Supplemental Request	**$**	**567,580**

Building Specialties
Equipment
Installation
Service

COMBINED BUILDING SPECIALTIES

4921 W FRANK BOYCE DRIVE
SIOUX FALLS, SD 57107
Phone: (605) 331-6904 Fax: (605) 331-6913
Email: sales@combinedbuilding.com
Website: www.combinedbuilding.com

JOB NUMBER : **SSX2433121**

JOB NAME : **Corn Palace Fixed Seating**

LOCATION : **Mitchell, SD**

LETTING DATE : **02/13/2025**

PROPOSAL DATE : **11/20/2024**

TO : **City Of Mitchell**

612 N. Main
Mitchell, SD 57301

We propose to furnish the following, subject to all the terms and conditions stated herein:

SECTION		BID AMOUNT
Base Bid		
Fixed Seats.	Option 4, 1,562 seats Quoting: 1,562 Hussey Fusion Chairs with padded seat and back. Includes attic stock. Price includes cupholders and end stanchion logos. Price includes install and all taxes. Removal of existing chairs/patching of holes is not included in this pricing!	$374,880.00
Fabric on	Sample Chair, Cost add Quoting: The OPTIONAL cost ADD to include the material that was presented on the sample chair (Overtime Weave). This is an optional cost only.	$23,000.00

COMBINED BUILDING SPECIALTIES

PROPOSAL : **SSX2433121** **STRUCTURE :** Corn Palace Fixed Seating

(Page 2)

SECTION	BID AMOUNT

Prices are F.O.B. to Mitchell, SD

THIS PROPOSAL FOR ACCEPTANCE WITHIN 30 DAYS

Submitted by: Brian (Print name) (Signature) 2/13/25 (Date)

Accepted by: (Print name) (Signature) (Date)

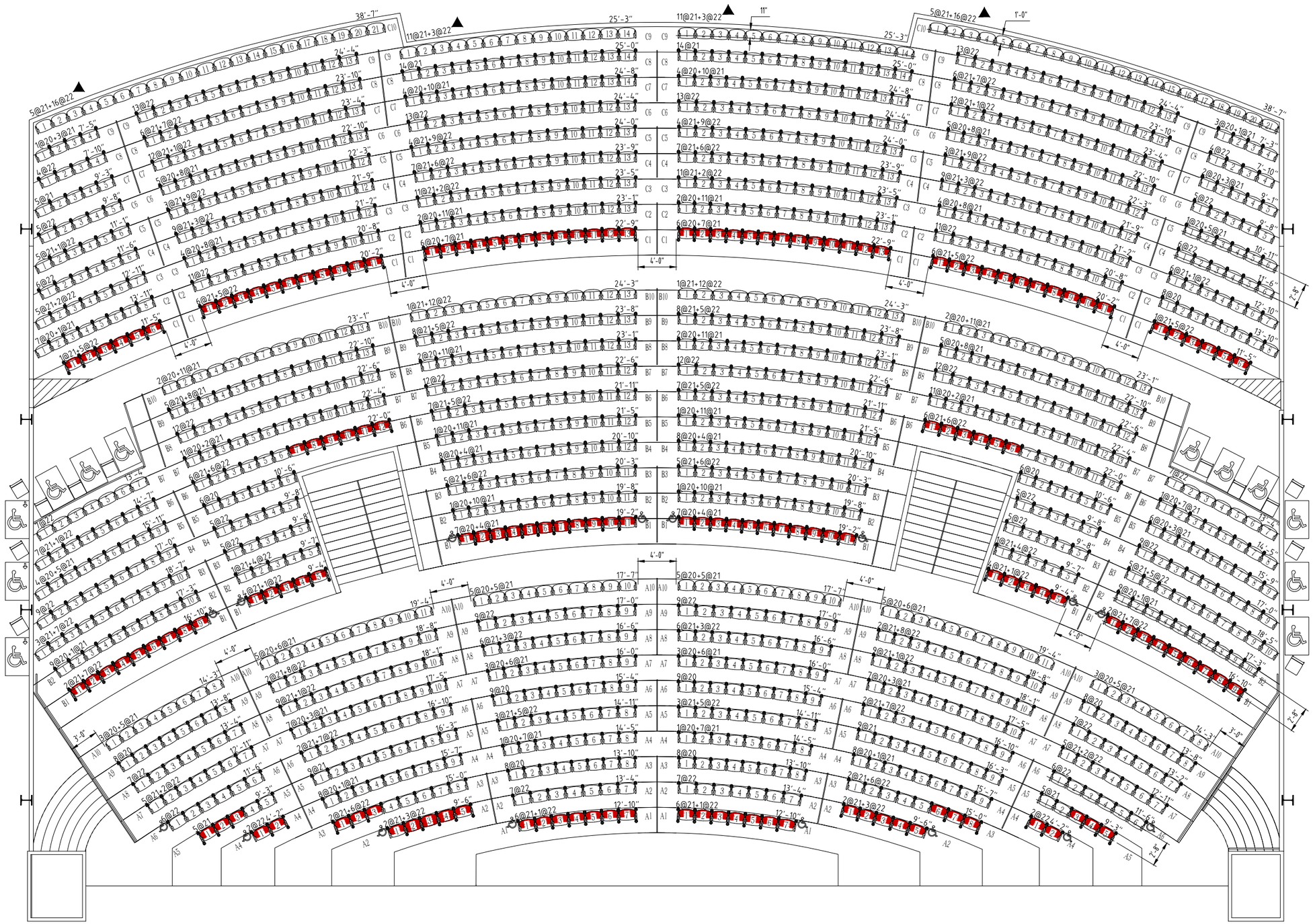

PROPOSED SEATING LAYOUT - OPTION 4

NOT FOR CONSTRUCTION
PRELIMINARY
2/12/2025
HUSSEY SEATING CO.
NOT FOR CONSTRUCTION

NOTE: DIMENSIONS ON THIS DRAWING ARE FOR SEATING LAYOUT PURPOSES ONLY

APPROVED BY: _____ DATE: _____

LEGEND

- = CUPHOLDER
- = ADA STANCHION
- = AISLE LIGHT
- = LOGO
- = SPECIAL SEAT FOR CUPHOLDER ARMREST
- = REMOVABLE CHAIR
- = FLOOR MNT CHAIR
- = WHEELCHAIR SPACE

****PLEASE NOTE****

THIS IS A GENERAL LEGEND, SOME OF THE SYMBOLS SHOWN MAY NOT PERTAIN TO THIS JOB

NOTES:
1. FEDERAL ADA CODE REQUIRES:
A. ALL WHEELCHAIR SPACES TO HAVE ONE COMPANION CHAIR PER SPACE
B. ALL WHEELCHAIR SPACES TO BE LOCATED ON A LEVEL SURFACE
C. A MAXIMUM SLOPE OF 1" PER FOOT WITH A 5'-0" LEVEL AREA EVERY 30'-0" OF SLOPE OR A MAXIMUM SLOPE OF 3/4" PER FOOT OVER A TOTAL SLOPE LENGTH OF 40'-0" (PLEASE ADVISE)
D. -15- WHEELCHAIR SPACES ARE REQUIRED FOR THIS QUANTITY OF SEATS.
E. -15- ADA EASY ACCESS END STANCHIONS ARE REQUIRED PER FEDERAL AMERICANS WITH DISABILITIES ACT. EQUAL TO 5% OF TOTAL AISLE SEATS

2. PLEASE VERIFY THE FOLLOWING
A. SEATING LAYOUT & QUANTITY
B. QUANTITY OF ROWS
C. ADA ARM LOCATIONS
D. WHEELCHAIR LOCATIONS
E. ROW LETTER / SEAT NUMBER SEQUENCE

SPACING INFORMATION

ROW SPACING = 2'-8"

CLEAR SPACE
SEAT UP = 1'-5 3/4"
SEAT DOWN = 0'-9 1/4"

SEATING SUMMARY

SIZE	QUANTITY
18"	0
19"	0
20"	293
21"	690
22"	579
TOTAL:	1562

WHEELCHAIR LOC. = 12
A.D.A. LOC. = 16

Hussey SINCE 1835
husseyseating™
YOUR PARTNER FOR SEATING SOLUTIONS
38 DYER STREET EXT.
NORTH BERWICK, ME. 03906
TELEPHONE: (207) 676-2271 FAX: (207) 676-9815

CORN PALACE
MITCHELL, SD

The layout shown is drawn per Hussey Seating Companys interpretation of :
IBC 2021
If the applicable code is different than the stated code please provide correct code information.

Rev	Draft	Date	Description
—		2/12/25	ORIGINAL

Dealer:
COMBINED BLDG SPECIALTIES

Drawn By: N. DESROCHERS
Checked By:

Sheet Title:
SEATING LAYOUT
OPTION 4

Hussey Order No.: Q516884
File Name: Q516884 OPT4

Sheet No.: 1 of 2

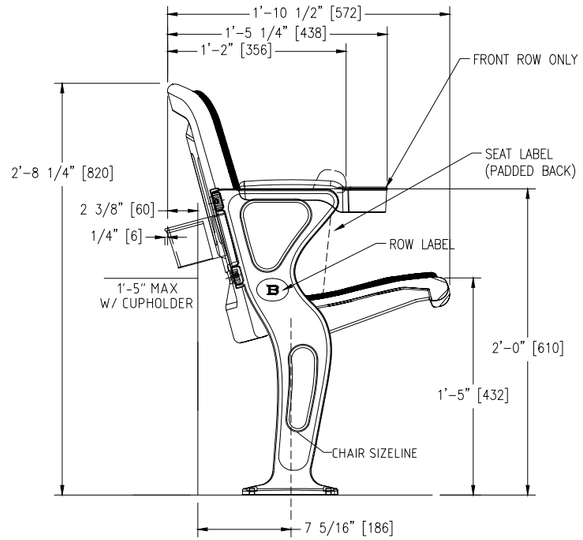

FLOOR MOUNT

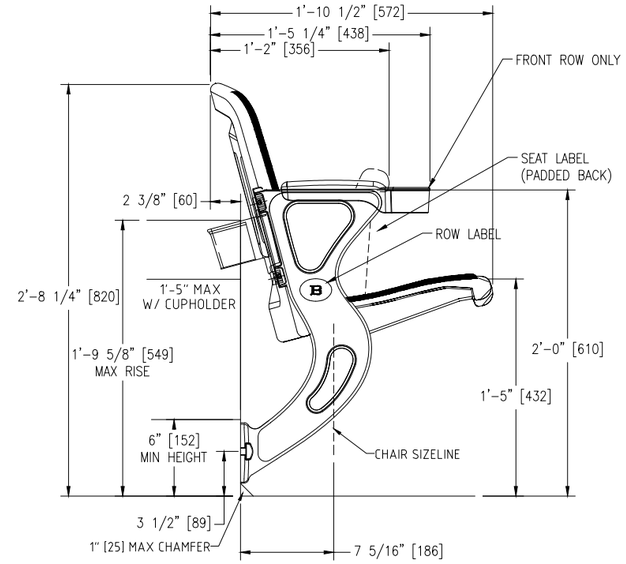

LOW RISE MOUNT

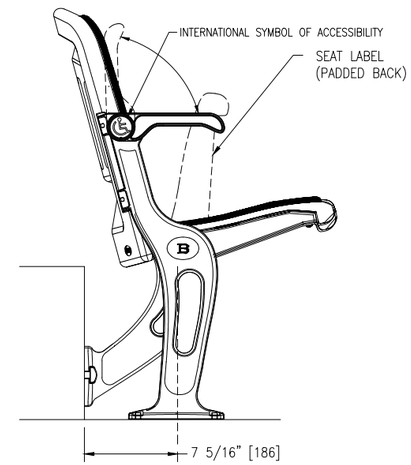

FLOOR MOUNT EASY ACCESS CHAIR
NEXT TO LOW RISE CENTER STN

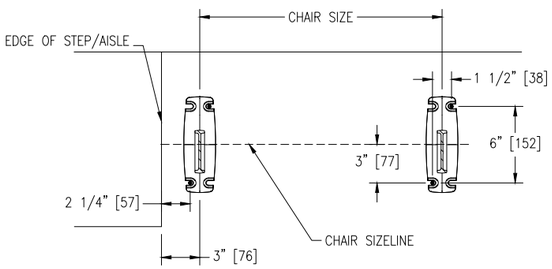

ANCHOR BOLT LOCATIONS

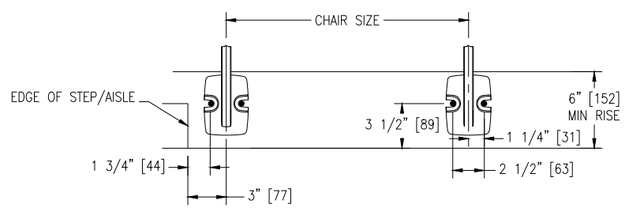

ANCHOR BOLT LOCATIONS

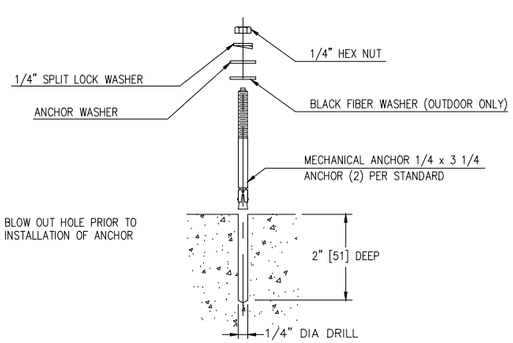

FLOOR MOUNT ANCHOR DETAIL

ADHESIVE ANCHOR INSTALLATION INSTRUCTIONS

1. PER MANUFACTURERES INSTRUCTIONS DRILL PROPER SIZED HOLE. CLEAN OUT HOLE FROM BOTTOM WITH FORCED AIR. COMPLETE HOLE PREPARATION WITH USE OF A WIRE BRUSH AND REPEAT CLEANING WITH FORCED AIR (REPEAT 4 TIMES EACH) (LEAVE NO DUST OR SLURRY)

2. WHEN STARTING A NEW CARTRIDGE OR NEW NOZZLE, DISPENSE AND DISCARD ENOUGH ADHESIVE UNTIL UNIFORM GRAY COLOR IS ACHIEVED (TYP. 3 FULL STROKES). INSERT THE NOZZLE INTO THE BOTTOM OF THE HOLE AND FILL TO 2/3 THE HOLE DEPTH.

3. INSERT THE SELECTED ROD SLOWLY BY HAND INTO THE BOTTOM OF THE HOLE WITH A SLOW TWISTING MOTION. THIS INSURES THE ADHESIVE FILLS VOIDS AND CREVICES AND UNIFORMLY COATS THE ANCHOR ROD.

4. SEE TABLE BELOW FOR WORKING TIMES AND CURING TIMES. AFTER THE SUGGESTED CURE TIME IS MET, INSTALL AND TIGHTEN FIXTURE INTO PLACE.

AC100+ GOLD ADHESIVE OR REDHEAD A7
WORKING AND CURING TIMES

BASE MATERIAL TEMP (F°)	CARTRIDGE TEMP (F°)	WORKING TIME	FULL CURE TIME
14°	68°–95°	90 MIN.	24 HRS
23°	68°–95°	90 MIN.	7 HRS
32°	68°–95°	45 MIN.	7 HRS
41°	68°–95°	25 MIN	7 HRS
50°	68°–95°	15 MIN	7 HRS
68°	68°–95°	6 MIN	4 HRS
86°	68°–95°	4 MIN	4 HRS
95°	68°–95°	2 MIN	4 HRS
100°	68°–95°	1.5 MIN	4 HRS
104°	68°–95°	1.5 MIN	4 HRS

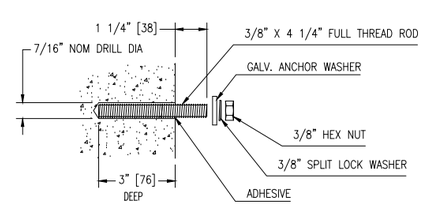

RISER MOUNT ADHESIVE ANCHOR DETAIL

GENERAL NOTES:

1. ALL FLOORS, SLABS, AND RISERS CONSTRUCTED OF CONCRETE (PRE-CAST OR POURED) MUST MEET THE FOLLOWING CRITERIA:
   a. FLOOR/SLAB MUST BE 4" [102] THICK min., WITH THE TOP 2"[51] CLEAR OF ANY OBSTRUCTIONS, MESHING, ETC.).
   b. RISERS MUST BE 4 1/2" [114] THICK min., WITH THE FIRST 21/2" [64] ALONG THE FACE CLEAR OF ANY OBSTRUCTIONS (REBAR, MESHING, ETC.).
   c. ALL CONCRETE MUST HAVE A MINIMUM STRENGTH OF 3,000 P.S.I. FOR NORMAL WEIGHT AGGREGATE AND 5,000 PSI FOR LIGHT WEIGHT AGGREGATE IN ORDER TO OBTAIN PROPER ANCHOR ATTACHMENT.
   d. ALL CONCRETE MUST BE CURED A MINIMUM OF 28 DAYS PRIOR TO DRILLING AND INSTALLING ANCHORS. APPROVAL BY HSC ENGINEER IS REQUIRED WITH ANY CONCRETE LESS THAN A FULL 28 DAYS CURE
   e. ALL STEEL FLOOR/RISERS MUST BE 1/4" [6] MIN TO 3/8" [10] MAX THICK GRADE A36 STEEL.
2. ALL FLOORS CONSTRUCTED OF WOOD MUST BE A SOLID 1 1/2" [38] THICK MIN.
3. ALL ROW LENGTHS INDICATED ON THE PLAN OF SEATING INCLUDE END SPACING AS STATED ON THIS DRAWING.
4. REFER TO THE INSTALLATION/MAINTENANCE MANUAL FOR ASSEMBLY INSTRUCTIONS.

FUSION FINISH SCHEDULE

COLORS

PAINT	T.B.D.
PLASTIC	T.B.D.
CUPHOLDER	T.B.D.

FABRIC

TYPE	T.B.D.
STYLE	T.B.D.
COLOR	

■ OUTDOOR - UV TREATMENT
☐ INDOOR - NON UV

FUSION BACKS

■ PLASTIC
■ PADDED

FUSION SEATS

■ PLASTIC ■ PADDED
☐ UPH'D SEAT - INDOOR ONLY

STANCHIONS

■ FLOOR MOUNT
■ LOW RISER MOUNT
☐ HIGH RISER MOUNT INTERMEDIATE
LOW RISER MOUNT ENDS

ARMRESTS INTEGRAL CAST

CLAMP-ON LOGO TYPE

☐ INTEGRAL CAST (ETO)
☐ GRAPHIC ADHESIVE

ADA ARM OPTIONS
(FLOOR MOUNT ONLY)

☐ ARMLESS
■ EASY ACCESS FLIP-UP

ACCESSORIES

SEAT #'s
☐ LEXAN ADHESIVE
■ BRUSHED ALUMINUM (RIVETED)

ROW LABELS
☐ LEXAN ADHESIVE
■ BRUSHED ALUMINUM (ADHESIVE)

☐ DONOR PLATES

REMOVABLE CHAIRS

☐ INDOOR
☐ OUTDOOR

CUPHOLDERS

☐ REAR MOUNT CLAMP-ON
■ REAR MOUNT BOLT-ON
☐ FRONT MOUNT (WALL / RAIL ONLY)
■ ARMREST MOUNTED CLIP-ON
"REQUIRES SPECIAL SEAT ASSY"

SUPPLIED BY:

■ HSC ☐ DEALER / CUSTOMER

NOTE: ALL SKID BASES AND OFFSET PLATES ARE GREY

ALL SHIMS WILL BE BLACK

SPARES

N/A

ANCHORS

☐ OUTDOOR ■ INDOOR
■ CONCRETE ☐ WOOD ☐ STEEL ☐ OTHER
■ By HUSSEY ☐ By OTHERS

hussey seating™
SINCE 1835
YOUR PARTNER FOR SEATING SOLUTIONS
38 DYER STREET EXT.
NORTH BERWICK, ME. 03906
TELEPHONE: (207) 676-2271 FAX: (207) 676-9815

CORN PALACE
MITCHELL, SD

The layout shown is drawn per Hussey Seating Companys interpretation of :
IBC 2021
If the applicable code is different than the stated code please provide correct code information.

Rev	Draft	Date	Description
—		11/19/2024	ORIGINAL

Dealer:
COMBINED BLDG SPECIALTIES

Drawn By: N CARPENTER
Checked By:

Sheet Title:
FUSION
FINISH DETAILS

Hussey Order No.: Q516884
File Name: Q516884DT01

Sheet No.: 2 of 2

husseyseating™
YOUR PARTNER FOR SEATING SOLUTIONS

Sourcewell
Awarded Contract
Contract # 081523-HSC

SOURCEWELL PROCUREMENT CONTRACT PRICING WORKSHEET [Telescopic & Fixed Seating]

QUOTE NUMBER: Q516884	**SOURCEWELL MEMBER CONTACT NAME: Stephanie Ellwein, Joe Schroeder**
PROJECT NAME: Corn Palace	**SOURCEWELL MEMBER NAME**: City of Mitchell
SOURCEWELL QUOTE DATE: 2/13/25	**SOURCEWELL MEMBER ID NUMBER:** 2333

IMPORTANT SOURCEWELL DOCUMENTATION REQUIREMENTS

1.) Dealer Quote to Sourcewell Member **MUST INCLUDE** the folowing | **Pricing Based on Sourcewell Awarded Contract #081523-HSC**

2.) Dealer **MUST PROVIDE** Hussey Seating a copy of the **Sourcewell Dealer Quote to the Customer at time of Order**. | FINAL WORK SHEET

3.) Dealer **MUST PROVIDE** Hussey Sesating a copy of the **Sourcewell Members Purchase Order to the Dealer**.

4.) Sourcewell Member Purchase Order **MUST INCLUDE** the following: **Pricing Based on Sourcewell Awarded Contract #081523-HSC & Member Name | Sourcewell Member ID Number**

LINE ITEM DESCRIPTIONS [To insert additional line items, highlight a row number then insert command. This will insert a complete row and maintain the formulas in the worksheet.]	QUANTITY	UOM	SOURCEWELL LIST PRICE	EXTENDED PRICE
COPY & ENTER LINE ITEMS FROM SOURCEWELL PRICELIST	-		$ -	$ -
Hussey Fusion Chair	1,562		$ 403.86	$ 630,829.32
Padded Seat	1,562		$ 44.22	$ 69,071.64
Padded Back	1,562		$ 44.22	$ 69,071.64
Cup Holders, Caddy IV Bolt on	1,493		$ 22.11	$ 33,010.23
Cup Holder Armrests	166		$ 29.72	$ 4,933.52
Seat Number	1,562		$ 3.68	$ 5,748.16
Row Letter	324		$ 3.68	$ 1,192.32
Graphic Logo (On End Stanchions on rows not against wall)	135		$ 73.70	$ 9,949.50
	-		$ -	$ -
	-		$ -	$ -
	-		$ -	$ -
	-		$ -	$ -

ADDS [To insert additional line items, highlight a row number then insert command. This will insert a complete row and maintain the formulas in the worksheet.]	QUANTITY	UOM	SOURCEWELL LIST PRICE	EXTENDED PRICE
COPY & ENTER LINE ITEMS FROM SOURCEWELL PRICELIST	-		$ -	$ -
	-		$ -	$ -
	-		$ -	$ -
	-		$ -	$ -
	-		$ -	$ -

PRICING SUMMARY	TOTAL PRICE
SOURCEWELL PUBLISHED LIST PRICE	$ 823,806.33
SOURCEWELL PUBLISHED DISCOUNT OFF LIST PRICE	40%
SOURCEWELL DISCOUNTED NET PRICING | Delivered & Installed | CEILING PRICE, NOT TO EXCEED	**$ 494,283.80**
OPTIONAL Additional Sourcewell Discount Off List | Dealer Discretion	29%
FINAL | SOURCEWELL DISCOUNTED NET PRICING | Delivered & Installed	**$ 350,101.21**

DEALER USE | FINAL | SOURCEWELL DISCOUNTED NET PRICING | Delivered & Installed	$ -	SOURCED GOODS / OPEN-MARKET GOODS | PRODUCTS & SERVICES
	$ 24,778.79	TAXES
	$ -	BONDS
	$ 374,880.00	**TOTAL NET PRICING | Delivered & Installed | DEALER TO SOURCEWELL MEMBER**

Hussey Seating #081523-HSC

Pricing for contract #081523-HSC offers Sourcewell participating agencies the following discounts:

- Hussey Telescopic/Retractable Bleacher Seating | MAXAM – 40% Discount from list price
- Hussey Telescopic/Retractable Platform Seating | MAXAM+ – 40% Discount from list price
- Hussey Telescopic/Retractable Platform Seating | MXP – 40% Discount from list price
- Hussey Upholstered Auditorium Fixed Seating | Quattro – 40% Discount from list price
- Hussey Sport & Entertainment Fixed Seating | Legend & Fusion – 40% Discount from list price
- Each line will also carry an additional volume discount divided into the following quantity ranges:
    - Volume pricing discounts for Telescopic Seating:
        - 0-400 seats
        - 400-800 seats
        - 800-1200 seats
        - 1200-1600 seats
        - 1600-2000 seats
        - 2000-2400 seats
        - 2400-3000+ seats
    - Volume pricing discounts for Fixed and Portable Seating:
        - 25-149 seats
        - 150-249 seats
        - 250-749 seats
        - 750+ seats

COMMENT AND REVIEW
to the
REQUEST FOR PROPOSAL (RFP) #081523
Entitled
Event Seating and Staging Solutions with Related Accessories and Services

The following advertisement was placed June 27, 2023 in *USA Today*, in South Carolina's *The State,* and on the Sourcewell website www.sourcewell-mn.gov, Sourcewell Procurement Portal https://proportal.sourcewell-mn.gov, Biddingo, Merx, PublicPurchase.com, The New York State Contract Reporter www.nyscr.ny.gov, June 28, 2023 in Oregon's *Daily Journal of Commerce*, and June 27 and July 3, 2023 in *The Oklahoman*:

> *Sourcewell, a State of Minnesota local government unit and service cooperative, is requesting proposals for Event Seating and Staging Solutions with Related Accessories and Services to result in a contracting solution for use by its Participating Entities. Sourcewell Participating Entities include thousands of governmental, higher education, K-12 education, nonprofit, tribal government, and other public agencies located in the United States and Canada. A full copy of the Request for Proposals can be found on the Sourcewell Procurement Portal [https://proportal.sourcewell-mn.gov]. Only proposals submitted through the Sourcewell Procurement Portal will be considered. Proposals are due no later than August 15, 2023, at 4:30 p.m. Central Time, and late proposals will not be considered.*

The solicitation process was conducted through the Sourcewell Procurement Portal. The following parties expressed interest in the solicitation by registering for this opportunity within the portal:

American Athletix, LLC	Regina Construction Association
Dant Clayton Corporation	Schultz Industries, Inc.
Deere & Company	Sedia Systems, Inc.
Farber Sound LLC	SICO America, Inc.
Figueras Seating USA, Inc.	Sightline Commercial Solutions, LLC
FSR Consulting, LLC dba Cirrus Systems	Solectrac, Inc.
Hussey Seating Company	Southern Bleacher Company, Inc.
Intivity	Specseats International Corp.
National Recreation Systems	StageRight Corporation
OFS Brands, Inc.	Telescopic Seating Systems, LLC
PWXPress	

All Proposals remained sealed within the Sourcewell Procurement Portal until the scheduled due date and

DocuSign Envelope ID: 1DC2372A-AC8B-4378-899D-D9FDF58D38E4

time. Proposals were electronically opened, and the list of all Proposers was made publicly available on the Sourcewell Procurement Portal, on August 15, 2023 at 4:30:52 pm CT. Proposals were received from the following:

American Athletix, LLC
Dant Clayton Corporation
Figueras Seating USA, Inc.
Hussey Seating Company
National Recreation Systems
Sedia Systems, Inc.
SICO America, Inc.
Specseats International Corp.

Proposals were reviewed by the Proposal Evaluation Committee:

Kim Austin, MBA, CPPB, NIGP-CPP, Procurement Supervisor
Greg Grunig, MA, Lead Procurement Analyst
Brandon Town, NIGP-CPP, CPSM, CPSD, Procurement Analyst
Carol Jackson, Procurement Analyst

The findings of the Proposal Evaluation Committee are summarized as follows:

The Proposal Evaluation Committee applied the Sourcewell RFP evaluation criteria and determined that all proposal responses met the scope and mandatory submittal requirements and were evaluated.

Dant Clayton offers a complete and innovative line of outdoor and indoor spectator seating solutions. This includes design and fabrication of individual projects with full service technical support as well as assembly and installation. They serve North America with a National Sales Team and Dealer Network in the United States and a growing presence in Canada. Dant Clayton provides a standard warranty with an optional inspection contract to extend product life and performance. They provide competitive not-to-exceed pricing to Sourcewell participating entities.

Figueras Seating USA, Inc. is offering a full line of movable, fixed, planetarium, stadium, arena, and waiting area seating solutions. In addition, they provide Made to Measure, which offers a wide selection of finishes and materials, design, and installation services. Their sales, support and installation services are available to Sourcewell participating entities in the United States and Canada. Figueras is providing a substantial discount off their MSRP pricing.

Hussey Seating Corporation is a seventh-generation company that designs, engineers, manufactures, and installs a large variety of seating solutions. Their seating solutions are comprised of a mix of recycled materials and their products can be 100% recycled. They have a multiple showrooms and manufacturing locations, as well as dealer network that will sell and service to all Sourcewell participating entities. Hussey Seating Corporation is offering a solid discount off their list pricing.

National Recreation Systems is offering a wide variety of bleachers, along with aluminum benches and picnic tables. Their independent dealer network is prepared to cover all of the United States and Canada. Their dealer network will also offer inspections, service, and installation. National Recreation Systems is offering Sourcewell participating entities competitive pricing off list price.

DocuSign Envelope ID: 1DC2372A-AC8B-4378-899D-D9FDF58D38E4

SICO America, Inc. is providing a complete offering of mobile and modular stages, risers, and accessories. Sourcewell participating entities may choose self-installation, or installation services from a SICO certified contractor. SICO's sales and dealer network are available to serve Sourcewell participating entities throughout the United States and Canada. They are offering a solid discount off list price.

For these reasons, the Sourcewell Proposal Evaluation Committee recommends award of Sourcewell Contract #081523 to:

Dant Clayton	#081523-DCT
Figueras Seating USA, Inc.	#081523-FGS
Hussey Seating Corporation	#081523-HSC
National Recreation Systems	#081523-NRS
SICO America, Inc.	#081523-SICO

The preceding recommendations were approved on October 4, 2023.

DocuSigned by:
Kim Austin
6830543C58384D1...

Kim Austin, MBA, CPPB, NIGP-CPP, Procurement Supervisor

DocuSigned by:
Greg Grunig
7DDDCEFD8B3D45D...

Greg Grunig, MA, Lead Procurement Analyst

DocuSigned by:
Brandon Town
7BCA93CD6377421...

Brandon Town, NIGP-CPP, CPSM, CPSD, Procurement Analyst

DocuSigned by:
Carol Jackson
6EE63AEDED5F46E...

Carol Jackson, Procurement Analyst

DocuSign Envelope ID: 1DC2372A-AC8B-4378-899D-D9FDF58D38E4

STATEMENT OF COMPLIANCE

As Chief Procurement Officer for Sourcewell, I have reviewed the recommendation of the Evaluation Committee and the accompanying support materials documenting the process followed for **RFP #081523** for **Event Seating and Staging Solutions with Related Accessories and Services**.

The committee accepted, deemed responsive, evaluated, and recommended proposals for award. Under authority granted to the Chief Procurement Officer in Sourcewell's bylaws, the recommendations set forth above are approved.

I hereby certify:

1. Sourcewell is a government agency, created and authorized by Minnesota law to provide cooperative procurement contracts.

2. The procurement process and resulting contracts have been awarded in compliance with the laws of the State of Minnesota (Minnesota Statutes Chapter 471 and Minnesota Statutes Section 123A.21), and in conformity to Sourcewell's Procurement Policy.

DocuSigned by:
Jeremy Schwartz
C0FD2A139D06489...

Jeremy Schwartz, CSSBB, CPPO, NIGP-CPP
Sourcewell Chief Procurement Officer

CITY OF MITCHELL

City Council Meeting
Agenda Item Request

The deadline for agenda items is Wednesday at noon, prior to the City Council Meeting

Meeting Date Requested:	February 18, 2025	**Requested By:**	Joe Schroeder
Desired Action of City Council:			
Amount Budgeted in current fiscal year for this item (if applicable):	N/A		
Agenda Item:	Action to Approve Agreement #A2025-16, Utility Easement License for Randall Regional Water Transmission Line		
Explanation/Background of Agenda Item Requested:	Action to Approve Utility Easement License Agreement A2025-16 for Randall Regional Water Transmission Line Randall Community Water District (RCWD) is requesting easements from the City of Mitchell for the placement of the Randall Regional Water Trasmission Line. RCWD requires easements for three separate locations on property that the City owns, manages right-of-way or has easements on private property. The three locations are shown within the attached easement document. Staff recommends council approval and to grant authorization for the Mayor to sign.		

UTILITY EASEMENT LICENSE AGREEMENT
RANDALL REGIONAL WATER TRANSMISSION LINE

THIS UTILITY EASEMENT LICENSE AGREEMENT ("Agreement") is made this 18th day of February 2025, between City of Mitchell, whose address is 612 N Main Street, Mitchell, SD 57301, (hereinafter "Mitchell"), and Randall Community Water District, whose street address is 445 E Main St, Lake Andes, SD 57356 (hereinafter "RCWD"). Mitchell and RCWD may be singularly referred to herein as the Party or collectively referred to herein as the Parties.

RECITALS

WHEREAS, RCWD plans to construct in the service territory of Mitchell a regional water transmission line, and

WHEREAS, Mitchell owns certain easements on Private Property, manages ROW, and Owns Private Property; and

WHERAS, RCWD wishes to install and maintain the regional transmission line within Mitchell's easements, ROWs, and Private Property in order to comply with the water service contract requirements; and

WHEREAS, Mitchell, as a convenience to RCWD, consents to allow RCWD to use portions of the easements, ROWs, and Private Property for the purposes of installation, maintenance, and repair of a regional water transmission line (the "Improvement"); and

WHERAS, RCWD is required to obtain all necessary permits, easements, and access agreements prior to performing any work in Mitchell's easements, ROW, and Private Property.

AGREEMENT

NOW, THEREFORE, for and in consideration of the mutual promises contained herein, and other good and valuable consideration, the sufficiency of which are hereby acknowledged, the Parties agree as follows:

1. Incorporation of Recitals: The Parties incorporate the above-stated Recitals into this Agreement as if fully stated herein.

2. Description and Use of Mitchell's Areas: Mitchell hereby grants to RCWD a License for the installation, maintenance, and repair of the Improvement within portions of Mitchell's easements, ROWs, and Private Property under Mitchell's management/ownership, specifically at the following locations:

A. Crossing at W40' of SE ¼, Sec 34, T103, R60W as shown on Exhibit A Page 1
B. Crossing Existing Transmission Line as shown on Exhibit A Page 1
C. Alignment into Tract 1, Mitchell Waterworks 1st Addition on Exhibit A Page 2

A location map depicting the areas in more detail is attached hereto and incorporated herein by reference (the "Licensed Territory"). As this Agreement only creates a license, each Party's rights and obligations stated hereunder are exclusively contractual. Thus, each Party agrees and understands that this Agreement does not create a real property interest of any kind or nature, or any type of possessory estate or possessory interest in the Licensed Areas. The entire Licensed Areas shall be for the shared use of RCWD and Mitchell, their employees, agents, servants and invitees for any lawful purposes associated with the maintenance and lawful use of the Improvement. The Improvement shall be owned by RCWD.

3. Term and Commencement of Use: The License shall commence on the date written above, hereinafter referred to as the Commencement Date, and it shall continue indefinitely until RCWD no longer requires the Licensed Areas or unless sooner terminated in whole or in part as more fully set forth in Paragraph 5 below.

4. Additional License Terms:

a. Easement Use. RCWD is responsible to ensure no damage occurs to Mitchell's existing water lines and other installations that may be present in the easements, ROWs, and Private Property during installation, construction, maintenance or repair of the Improvement. Mitchell reserves the right to issue work in the licensed permit areas allowing for the installation of Mitchell's facilities in the easements, ROWs, and Private Property. RCWD shall not interfere with these installations. Mitchell shall notify RCWD of planned work in the easement, ROW, and Private Property areas covered by this license and make every effort to protect RCWD's Improvement within the Licensed Areas.

b. Damage. RCWD is responsible for reimbursing Mitchell for the repair of any damage to the property of Mitchell, or any other improvements resulting from RCWD's operations. RCWD shall hold Mitchell, its elected officials, appointees, officers, and employees free and harmless from all risk of injury or damage to RCWD, property of RCWD, and RCWD's agents, employees, assigns and successors or others which may result from debris, foreign objects, or chemical contamination resulting from construction activities performed by RCWD. RCWD is responsible for reimbursing Mitchell for the repair and re-survey of any damage and disturbance to any survey monuments resulting from activities within the Licensed Areas by RCWD.

c. Mitchell's Need for Easements. Mitchell will not damage or remove any RCWD Improvement placed within the Licensed Areas if Mitchell needs to access the Licensed area, in whole or in part, for any reason including, but not limited to safety, maintenance, or construction.

d. Work in the Licensed Permit Areas. Prior to any major construction, operation, and maintenance activities within the Licensed Permit Areas, RCWD shall notify Mitchell thirty (30) days prior to beginning Work in the Licensed Permit area. Mitchell shall notify RCWD thirty (30) days prior to beginning Work in the Licensed Permit area. If circumstances do not allow for thirty (30) days prior notice, the party performing the Work shall

provide as much notice as is possible under the circumstances to the other party before beginning Work in the Licensed Permit area.

e. Provision of Utilities. If the Improvement is connected to any utilities, e.g. communications or electrical, RCWD shall be responsible for complying with all rules and paying all rates and costs established by the utility providers.

f. Maintenance of Improvement. As the Improvement will occupy a part Mitchell's easements, ROWs, and Private Property, RCWD is expected to maintain the Improvement in an acceptable manner. Upon notice of any deficiency in the Improvements, either: a) by Mitchell; or b) by its own observation; or c) by any other means, RCWD shall take action as soon as possible, but not later than fifteen (15) working days after the mailing date of written notice from Mitchell to correct the deficiency. In the event RCWD, for any reason, does not or cannot correct the deficiency within fifteen (15) working days of written notice as contemplated above, or demonstrate that action satisfactory to cure such default has been commenced and will be completed in a timely manner, or otherwise demonstrated that no deficiency exists, Mitchell reserves the right to correct the deficiency and to bill RCWD for such work. RCWD shall pay any such bill within thirty (30) days after receipt.

g. Maintenance of Easements. Mitchell shall use commercially reasonable efforts not to damage or otherwise reduce the value or capacity of the improvement as part of a maintenance operation. Mitchell may be held responsible to RCWD for any damage to the Improvement that may occur in the course of maintenance in the Licensed Areas due to a failure to use commercially reasonable efforts.

h. Natural Disasters. Mitchell shall not be liable to RCWD in the event of an emergency, such as a fire, flood, or other natural cause which damages the Licensed Areas or the Improvement. In the event the Licensed Areas are damaged due to a natural disaster, it shall be the sole responsibility and cost of RCWD to return the Improvement, to its original condition. If RCWD chooses not to replace or repair the Improvement and instead wishes to terminate the License Agreement, the provisions of paragraph 5.b. below apply.

5. Termination:

a. Termination by Mitchell. Mitchell shall give RCWD notice of any violation of the agreement or deficient condition and allow thirty (30) days for RCWD to rectify the deficiency or demonstrate they have a plan to rectify the deficiency when conditions permit. Mitchell at any time and upon an unresolved violation or deficiency of any term of the License by RCWD, shall notify the RCWD of intent to terminate the License for the unrectified deficiency on the Licensed Areas by giving at least one hundred twenty (120) days' prior written notice to RCWD. Should such condition remain deficient after the one hundred twenty (120) days' notice, Mitchell may terminate the license with one hundred eighty (180) days' notice prior to the effective date of termination.

b. Termination by RCWD. RCWD at any time shall be entitled to terminate the License on all or part of the Licensed Areas by giving at least ninety (90) days' prior written

notice to Mitchell. Upon termination by RCWD of the License on all or part of the Licensed Areas, and if requested by Mitchell, RCWD shall abandon the Improvements in place at the time of the termination. RCWD shall not terminate the License so long as the infrastructure in the Licensed Areas that is used to serve water to Mitchell pursuant to the Water Use Agreement between RCWD and Mitchell remains the only method of meeting the demand requirements of said contract. However, if the Water Use Agreement remains in place but RCWD provides alternative infrastructure outside of the licensed area to satisfy the demands under said Water Use Agreement, then RCWD may terminate the License.

c. Effect of Termination. Upon termination of the License on all or part of the Licensed Areas by either Party, RCWD shall not be entitled to the payment of any compensation or just compensation under any cause of action at law or in equity for the retaking of the Licensed Areas or removal or relocation of the Improvement. If the License is terminated on only a portion of the Licensed Areas, Mitchell and RCWD shall retain their respective rights and obligations under this Agreement with respect to the remaining portions of the Licensed Areas, and RCWD shall not have any further rights or obligations with respect to any part of the Licensed Areas for which the License has been terminated.

6. Condition of the Licensed Areas, Obligation to Make Repairs, Obligation to Remain in Compliance with Laws: RCWD agrees and understands that it commences its use of the Licensed Areas "AS IS" and without any warranties of any kind or nature, including without any warranties as to the state of Mitchell's title to the Licensed Areas. It shall be RCWD's sole obligation to maintain and make any necessary repairs to the Improvement and the Licensed Areas, and to do so in full compliance with the requirements of the South Dakota Department of Ag and Natural Resources and any other applicable state, federal, or local laws, regulations, and ordinances**.** Mitchell shall notify RCWD of any condition affecting public health, safety or welfare by the RCWD's use of the Licensed area. Upon such notice, Mitchell may direct RCWD to repair all deficiencies related to the installation of the Improvement and RCWD shall restore the Licensed Areas to its original condition to the extent reasonably practicable, ordinary wear and tear excepted.

7. Indemnification/Hold Harmless: RCWD shall indemnify and hold Mitchell and its heirs, successors and/or assigns harmless from and against any and all damages, loss, cost, expense, liabilities of any kind or nature as a result of, or in connection with, RCWD's, its contractors', agents', or employees' activities on the Licensed Areas, failure to comply with the terms of this Agreement, or failure to maintain the Licensed Areas in a safe condition. Nothing in this section shall be deemed to waive or otherwise limit the defenses available to Mitchell as provided by law.

8. Assignment: RCWD shall not assign or otherwise transfer this License or Agreement or any right or obligation hereunder without the prior written consent of Mitchell, which consent shall not be unreasonably withheld, conditioned, or delayed. Should Mitchell agree to such assignment, Mitchell and RCWD hereby expressly agree that the intent of such benefit to said successors in title is not to create an easement in the Licensed Areas, but rather, a Limited License. Mitchell and RCWD, both for themselves and for their successors in title, agree that this License is terminable at the will of Mitchell as set forth in Paragraph 5 above.

9. Construction: The rule of strict construction does not apply to this instrument. This License shall be given a reasonable construction in light of the intention of Mitchell to confer on RCWD a usable right to construct, maintain, repair, and replace the Improvement described herein.

10. Right to Inspect: Mitchell may enter upon the Licensed Areas at any time and without notice to inspect the condition of the Licensed Areas.

11. Remedies: The Parties hereby agree that if any dispute cannot be resolved by mutual agreement of the Parties, such dispute may be resolved at law or in equity.

12. No Third-Party Beneficiaries. This Agreement does not and shall not be deemed to confer on any third party the right to the performance of or proceeds under this Agreement, to claim any damages or to bring any legal action or other proceeding against any Party hereto for any breach or other failure to perform this Agreement.

13. Entire Agreement: This Agreement, together with all exhibits attached hereto, constitutes the entire agreement between the Parties hereto, and all other representations or statements heretofore made, verbal or written, are merged herein, and this Agreement may be amended only in writing and executed by duly authorized representatives of the Parties hereto.

14. Binding: RCWD and Mitchell hereby agree that the covenants, stipulations, and conditions as stated in this Agreement shall inure to the benefit of and shall be binding upon the heirs, personal representatives, successors and assigns of Mitchell and RCWD in the event the Mitchell agrees to an assignment of the Agreement.

15. Authority: The undersigned hereby acknowledge and represent that they have legal authority to bind the Party for whom they are executing this Agreement.

16. Applicable Law: The federal, state, and local laws, rules, and regulations shall be applicable in the enforcement, interpretation, and execution of this Agreement. The Parties understand and agree that, in the event of any litigation that may arise under this Agreement, jurisdiction and venue shall lie in the District Court of Davison County, South Dakota.

17. Execution: This Agreement, including facsimile copies of this Agreement, may be executed in counterparts, each of which shall be deemed an original, but all of which shall constitute one and the same instrument. In the event facsimile copies of this Agreement are executed, the original signatures shall be compiled and attached to form the original Agreement.

18. Recording: This Agreement shall be recorded by the County in the records of the Davison County Register of Deeds Office.

IN WITNESS WHEREOF, Mitchell and RCWD have executed this Agreement as of the day and year above written.

	MITCHELL:
ATTEST:	City of Mitchell
By: _____	By: _____
Michell Bathke, Finance Officer	Jordan Hanson, Mayor

STATE OF SOUTH DAKOTA)
) S.S.
COUNTY OF DAVISON)

The foregoing instrument was acknowledged before me this _____ day of _____, 20____, by Jordan Hanson**,** as Mayor of the City of Mitchell.

WITNESS my hand and official seal.

My Commission Expires: _____.

_____
Notary Public

RCWD:
Randall Community Water District

ATTEST:

By: _____

RCWD:
Randall Community Water District

By: _____
Scott Pick, Manager

STATE OF SOUTH DAKOTA)
) S.S.
COUNTY OF CHARLES MIX)

The foregoing instrument was acknowledged before me this _____ day of _____, 20____, by Scott Pick, as Manager of Randall Community Water District.

WITNESS my hand and official seal.

My Commission Expires: _____.

_____
Notary Public

CROSSING @ W40' OF SE 1/4 SEC.34-T103-R60W

Exhibit A

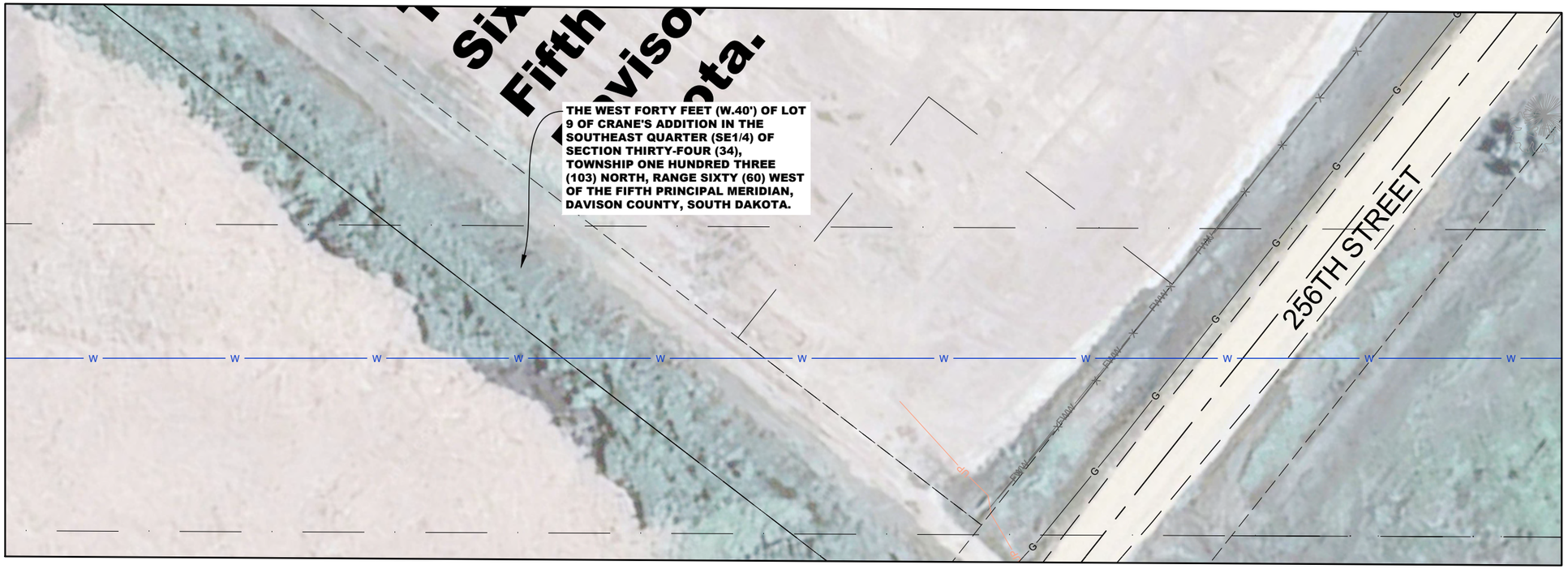

N

0 20 40

SCALE 1" = 40'

LEGEND

—G—	GAS LINE
—UP—	UNDERGROUND POWER LINE
—OH—	OVERHEAD POWER LINE
— — —	EXISTING EDGE OF ASPHALT
—FWW—	WOVEN WIRE FENCE
—W—	EXISTING WATER LINE
—W—	PROPOSED WATER LINE
—T/FO—	TELEPHONE/FIBER OPTIC LINE

CROSSING EXISTING TRANSMISSION LINE

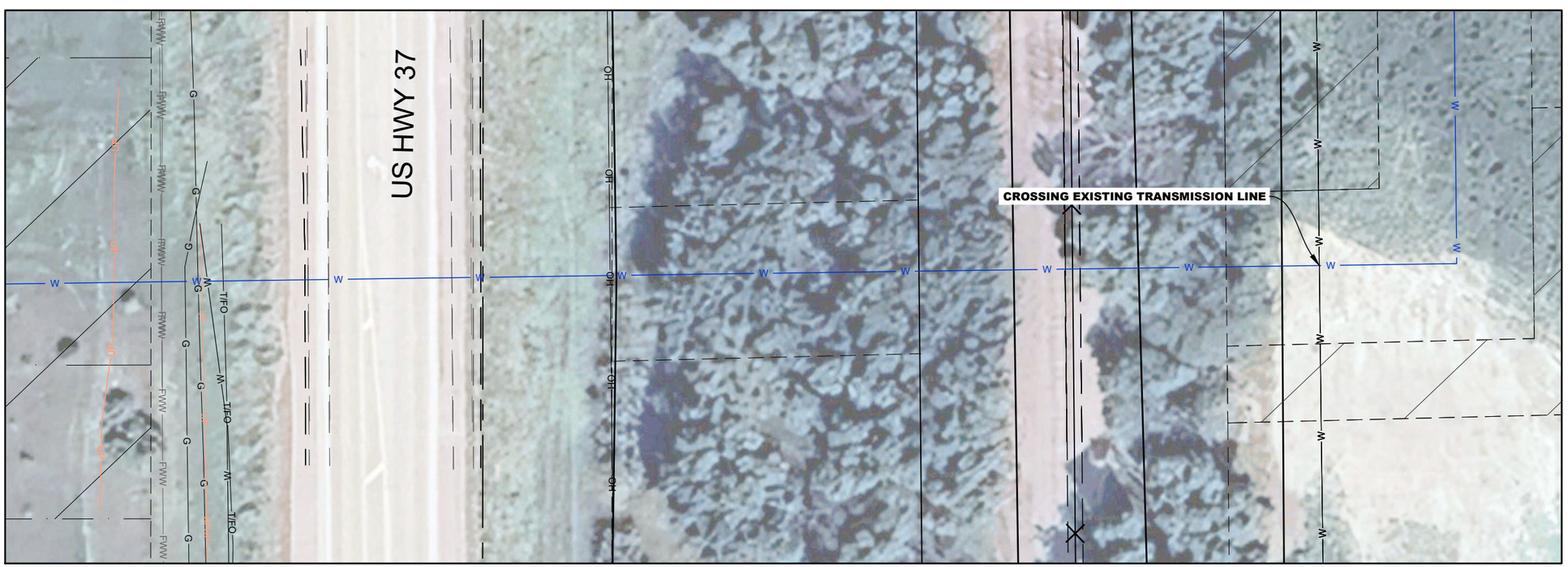

N

0 20 40

SCALE 1" = 40'

SHEET
1

PROJ:	2407007
DATE:	12/23/24
DRAWN BY:	KO
CHECKED:	BL

REV	DATE	BY	DESCRIPTION
1	-	-	
2	-	-	
3	-	-	
4	-	-	
5	-	-	

ROW CROSSINGS
RCWD REGIONAL TRANSMISSION LINE
CITY OF MITCHELL

2309 W. 50th St.
Sioux Falls, SD 57105
(605) 336-1676
www.broszeng.com

Brosz ENGINEERING, INC.

Exhibit A

SHEET 2

PROJ:	2407007
DATE:	12/23/24
DRAWN BY:	KO
CHECKED:	BL

REV	DATE	BY	DESCRIPTION
1	-	-	
2	-	-	
3	-	-	
4	-	-	
5	-	-	

N

0 20 40

SCALE 1" = 40'

ALIGNMENT INTO TRACT 1 MITCHELL WATERWORKS 1ST ADDITION

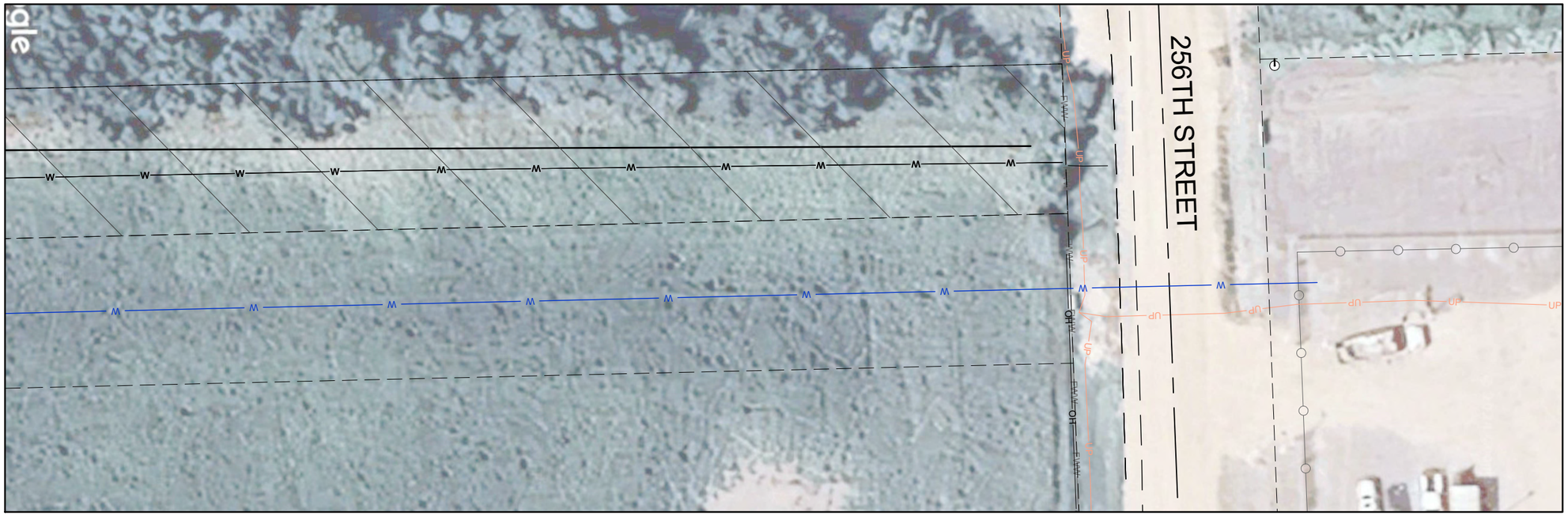

LEGEND

— — —	EXISTING EDGE OF ASPHALT	—G—	GAS LINE
—FWW—	WOVEN WIRE FENCE	—UP—	UNDERGROUND POWER LINE
—W—	EXISTING WATER LINE	—OH—	OVERHEAD POWER LINE
—T/FO—	TELEPHONE/FIBER OPTIC LINE	—W—	PROPOSED WATER LINE

ROW CROSSINGS
RCWD REGIONAL TRANSMISSION LINE
CITY OF MITCHELL

2309 W. 50th St.
Sioux Falls, SD 57105
(605) 336-1676
www.broszeng.com

BROSZ ENGINEERING, INC.

CITY OF MITCHELL

City Council Meeting
Agenda Item Request

The deadline for agenda items is Wednesday at noon, prior to the City Council Meeting

Meeting Date Requested:	February 18, 2025	**Requested By:**	Joe Schroeder
Desired Action of City Council:			
Amount Budgeted in current fiscal year for this item (if applicable):			
Agenda Item:	Action to Approve Agreement #A2025-17, Cadwell Park Infield Improvements with SPN & Associates, Project #2025-23		
Explanation/Background of Agenda Item Requested:	Agreement 2025-17 for Cadwell Park Infield Improvements with SPN and Associates SPN and Associates was requested to provide a proposal for design, bidding and construction phase services for an infield project at Cadwell Park. The proposal includes reconstructing the infield with a sand mix and new grass turf, under-drain and storm sewer as needed. The project was discussed during the 2025 budget hearings but was not budgeted at that time. Proposed fees are at an hourly rate not to exceed with the not to exceed amounts as follows: Preliminary Design - $6,000 Final Design - $4,500 Bidding and Negotiating - $4,500 Construction - $18,000 Staff recommends approval of the proposed agreement with SPN & Associates to perform design services at an hourly rate not to exceed fee of $33,000.		

CADWELL PARK INFIELD IMPROVEMENTS

AGREEMENT
BETWEEN OWNER AND ENGINEER
FOR PROFESSIONAL SERVICES

Prepared by

EJCDC®
ENGINEERS JOINT CONTRACT DOCUMENTS COMMITTEE

Issued and Published Jointly by

ACEC
AMERICAN COUNCIL OF ENGINEERING COMPANIES

ASCE
AMERICAN SOCIETY OF CIVIL ENGINEERS

National Society of Professional Engineers®

EJCDC® E-500, Agreement Between Owner and Engineer for Professional Services.
Copyright © 2013 National Society of Professional Engineers, American Council of Engineering Companies, and American Society of Civil Engineers. All rights reserved.

Copyright © 2013:

National Society of Professional Engineers
1420 King Street, Alexandria, VA 22314-2794
(703) 684-2882
www.nspe.org

American Council of Engineering Companies
1015 15th Street N.W., Washington, DC 20005
(202) 347-7474
www.acec.org

American Society of Civil Engineers
1801 Alexander Bell Drive, Reston, VA 20191-4400
(800) 548-2723
www.asce.org

The copyright for this EJCDC document is owned jointly by the three sponsoring organizations listed above. The National Society of Professional Engineers is the Copyright Administrator for the EJCDC documents; please direct all inquiries regarding EJCDC copyrights to NSPE.

TABLE OF CONTENTS

Page

ARTICLE 1 – SERVICES OF ENGINEER 1
1.01 Scope 1

ARTICLE 2 – OWNER'S RESPONSIBILITIES 1
2.01 General 1

ARTICLE 3 – SCHEDULE FOR RENDERING SERVICES 2
3.01 Commencement 2
3.02 Time for Completion 2

ARTICLE 4 – INVOICES AND PAYMENTS 2
4.01 Invoices 2
4.02 Payments 2

ARTICLE 5 – OPINIONS OF COST 3
5.01 Opinions of Probable Construction Cost 3
5.02 Designing to Construction Cost Limit 3
5.03 Opinions of Total Project Costs 3

ARTICLE 6 – GENERAL CONSIDERATIONS 3
6.01 Standards of Performance 3
6.02 Design Without Construction Phase Services 5
6.03 Use of Documents 5
6.04 Electronic Transmittals 6
6.05 Insurance 6
6.06 Suspension and Termination 7
6.07 Controlling Law 8
6.08 Successors, Assigns, and Beneficiaries 9
6.09 Dispute Resolution 9
6.10 Environmental Condition of Site 9
6.11 Indemnification and Mutual Waiver 10
6.12 Records Retention 11
6.13 Miscellaneous Provisions 11

ARTICLE 7 – DEFINITIONS 11
7.01 Defined Terms 11

ARTICLE 8 – EXHIBITS AND SPECIAL PROVISIONS 15
8.01 Exhibits Included: 15
8.02 Total Agreement 15
8.03 Designated Representatives 15
8.04 Engineer's Certifications 16

EJCDC® E-500, Agreement Between Owner and Engineer for Professional Services.
Copyright © 2013 National Society of Professional Engineers, American Council of Engineering Companies, and American Society of Civil Engineers. All rights reserved.

THIS PAGE LEFT BLANK INTENTIONALLY

EJCDC® E-500, Agreement Between Owner and Engineer for Professional Services.
Copyright © 2013 National Society of Professional Engineers, American Council of Engineering Companies, and American Society of Civil Engineers. All rights reserved.

AGREEMENT
BETWEEN OWNER AND ENGINEER
FOR PROFESSIONAL SERVICES

THIS IS AN AGREEMENT effective as of **February 17, 2025** ("Effective Date") between

City of Mitchell, South Dakota ("Owner") and

Schmucker, Paul, Nohr and Associates ("Engineer").

Owner's Project, of which Engineer's services under this Agreement are a part, is generally identified as follows:

To install new storm sewer pipe, underdrain system and replace the infield with a sand mix and new grass turf infield at Cadwell Park, hereinafter referred to as the "PROJECT".

Other terms used in this Agreement are defined in Article 7.

Engineer's services under this Agreement are generally identified as follows: **Use client-provided field data (topographic survey) and collect additional field data (topographic survey) as needed to complete the design (plans and specifications), estimate costs, provide bidding and engineering services, construction administration and resident project representative services for the "PROJECT".**

Owner and Engineer further agree as follows:

ARTICLE 1 – SERVICES OF ENGINEER

1.01 *Scope*

A. Engineer shall provide, or cause to be provided, the services set forth herein and in Exhibit A.

B. **Specifically excluded from the scope of this Agreement is the design, bidding and construction phase services for the dugout renovations.**

ARTICLE 2 – OWNER'S RESPONSIBILITIES

2.01 *General*

A. Owner shall have the responsibilities set forth herein and in Exhibit B.

B. Owner shall pay Engineer as set forth in Article 4 and Exhibit C.

C. Owner shall be responsible for all requirements and instructions that it furnishes to Engineer pursuant to this Agreement, and for the accuracy and completeness of all programs, reports, data, and other information furnished by Owner to Engineer pursuant to this Agreement. Engineer may use and rely upon such requirements, programs, instructions, reports, data, and information in performing or furnishing services under this Agreement, subject to any express limitations or reservations applicable to the furnished items. **Engineer shall notify Owner in the event Engineer is aware that Owner supplied information that is inaccurate or questionable.**

D. Owner shall give prompt written notice to Engineer whenever Owner observes or otherwise becomes aware of:

Copyright © 2013 National Society of Professional Engineers, American Council of Engineering Companies, and American Society of Civil Engineers. All rights reserved.

1. any development that affects the scope or time of performance of Engineer's services;

2. the presence at the Site of any Constituent of Concern; or

3. any relevant, material defect or nonconformance in: (a) Engineer's services, (b) the Work, (c) the performance of any Constructor, or (d) Owner's performance of its responsibilities under this Agreement.

ARTICLE 3 – SCHEDULE FOR RENDERING SERVICES

3.01 *Commencement*

A. Engineer is authorized to begin rendering services as of the Effective Date.

3.02 *Time for Completion*

A. Engineer shall complete its obligations within a reasonable time. Specific periods of time for rendering services, or specific dates by which services are to be completed, are provided in Exhibit A, and are hereby agreed to be reasonable.

B. If, through no fault of Engineer, such periods of time or dates are changed, or the orderly and continuous progress of Engineer's services is impaired, or Engineer's services are delayed or suspended, then the time for completion of Engineer's services, and the rates and amounts of Engineer's compensation, shall be adjusted equitably.

C. If Owner authorizes changes in the scope, extent, or character of the Project or Engineer's services, then the time for completion of Engineer's services, and the rates and amounts of Engineer's compensation, shall be adjusted equitably.

D. Owner shall make decisions and carry out its other responsibilities in a timely manner so as not to delay the Engineer's performance of its services.

E. If Engineer fails, through its own fault, to complete the performance required in this Agreement within the time set forth, as duly adjusted, then Owner shall be entitled, as its sole remedy, to the recovery of direct damages, if any, resulting from such failure.

ARTICLE 4 – INVOICES AND PAYMENTS

4.01 *Invoices*

A. *Preparation and Submittal of Invoices:* Engineer shall prepare invoices in accordance with its standard invoicing practices and the terms of Exhibit C. Engineer shall submit its invoices to Owner on a monthly basis. Invoices are due and payable within 30 days of receipt.

4.02 *Payments*

A. *Application to Interest and Principal:* Payment will be credited first to any interest owed to Engineer and then to principal.

B. *Failure to Pay*: If Owner fails to make any payment due Engineer for services and expenses within 30 days after receipt of Engineer's invoice, then:

Copyright © 2013 National Society of Professional Engineers, American Council of Engineering Companies, and American Society of Civil Engineers. All rights reserved.

1. amounts due Engineer will be increased at the rate of 1.0% per month (or the maximum rate of interest permitted by law, if less) from said thirtieth day; and

2. Engineer may, after giving seven days written notice to Owner, suspend services under this Agreement until Owner has paid in full all amounts due for services, expenses, and other related charges. Owner waives any and all claims against Engineer for any such suspension.

C. *Disputed Invoices:* If Owner disputes an invoice, either as to amount or entitlement, then Owner shall promptly advise Engineer in writing of the specific basis for doing so, may withhold only that portion so disputed, and must pay the undisputed portion subject to the terms of Paragraph 4.01.

D. *Sales or Use Taxes:* If after the Effective Date any governmental entity takes a legislative action that imposes additional sales or use taxes on Engineer's services or compensation under this Agreement, then Engineer may invoice such additional sales or use taxes for reimbursement by Owner. Owner shall reimburse Engineer for the cost of such invoiced additional sales or use taxes; such reimbursement shall be in addition to the compensation to which Engineer is entitled under the terms of Exhibit C.

ARTICLE 5 – OPINIONS OF COST

5.01 *Opinions of Probable Construction Cost*

A. Engineer's opinions (if any) of probable Construction Cost are to be made on the basis of Engineer's experience, qualifications, and general familiarity with the construction industry. However, because Engineer has no control over the cost of labor, materials, equipment, or services furnished by others, or over contractors' methods of determining prices, or over competitive bidding or market conditions, Engineer cannot and does not guarantee that proposals, bids, or actual Construction Cost will not vary from opinions of probable Construction Cost prepared by Engineer. If Owner requires greater assurance as to probable Construction Cost, then Owner agrees to obtain an independent cost estimate.

5.02 *Designing to Construction Cost Limit*

A. If a Construction Cost limit is established between Owner and Engineer, such Construction Cost limit and a statement of Engineer's rights and responsibilities with respect thereto will be specifically set forth in Exhibit F to this Agreement.

5.03 *Opinions of Total Project Costs*

A. The services, if any, of Engineer with respect to Total Project Costs shall be limited to assisting the Owner in tabulating the various categories that comprise Total Project Costs. Engineer assumes no responsibility for the accuracy of any opinions of Total Project Costs.

ARTICLE 6 – GENERAL CONSIDERATIONS

6.01 *Standards of Performance*

A. *Standard of Care:* The standard of care for all professional engineering and related services performed or furnished by Engineer under this Agreement will be the care and skill ordinarily used by members of the subject profession practicing under similar circumstances at the same time and in the same locality. Engineer makes no warranties, express or implied, under this Agreement or otherwise, in connection with any services performed or furnished by Engineer.

Copyright © 2013 National Society of Professional Engineers, American Council of Engineering Companies, and American Society of Civil Engineers. All rights reserved.

B. *Technical Accuracy:* Owner shall not be responsible for discovering deficiencies in the technical accuracy of Engineer's services. Engineer shall correct deficiencies in technical accuracy without additional compensation, unless such corrective action is directly attributable to deficiencies in Owner-furnished information. **Engineer shall notify Owner in the event Engineer is aware that Owner supplied information that is inaccurate or questionable.**

C. *Consultants:* Engineer may retain such Consultants as Engineer deems necessary to assist in the performance or furnishing of the services, subject to reasonable, timely, and substantive objections by Owner.

D. *Reliance on Others:* Subject to the standard of care set forth in Paragraph 6.01.A, Engineer and its Consultants may use or rely upon design elements and information ordinarily or customarily furnished by others, including, but not limited to, specialty contractors, manufacturers, suppliers, and the publishers of technical standards.

E. *Compliance with Laws and Regulations, and Policies and Procedures:*

1. Engineer and Owner shall comply with applicable Laws and Regulations.

2. Engineer shall comply with any and all policies, procedures, and instructions of Owner that are applicable to Engineer's performance of services under this Agreement and that Owner provides to Engineer in writing, subject to the standard of care set forth in Paragraph 6.01.A, and to the extent compliance is not inconsistent with professional practice requirements.

3. This Agreement is based on Laws and Regulations and Owner-provided written policies and procedures as of the Effective Date. The following may be the basis for modifications to Owner's responsibilities or to Engineer's scope of services, times of performance, or compensation:

   a. changes after the Effective Date to Laws and Regulations;

   b. the receipt by Engineer after the Effective Date of Owner-provided written policies and procedures;

   c. changes after the Effective Date to Owner-provided written policies or procedures.

F. Engineer shall not be required to sign any document, no matter by whom requested, that would result in the Engineer having to certify, guarantee, or warrant the existence of conditions whose existence the Engineer cannot ascertain. Owner agrees not to make resolution of any dispute with the Engineer or payment of any amount due to the Engineer in any way contingent upon the Engineer signing any such document.

G. The general conditions for any construction contract documents prepared hereunder are to be EJCDC® C-700 "Standard General Conditions of the Construction Contract" (2013 Edition), prepared by the Engineers Joint Contract Documents Committee, unless expressly indicated otherwise in Exhibit J or elsewhere in this Agreement.

H. Engineer shall not at any time supervise, direct, control, or have authority over any Constructor's work, nor shall Engineer have authority over or be responsible for the means, methods, techniques, sequences, or procedures of construction selected or used by any Constructor, or the safety precautions and programs incident thereto, for security or safety at the Site, nor for any failure of a Constructor to comply with Laws and Regulations applicable to that Constructor's furnishing and performing of its work. Engineer shall not be responsible for the acts or omissions of any Constructor.

Copyright © 2013 National Society of Professional Engineers, American Council of Engineering Companies, and American Society of Civil Engineers. All rights reserved.

I. Engineer neither guarantees the performance of any Constructor nor assumes responsibility for any Constructor's, failure to furnish and perform the Work in accordance with the Construction Contract Documents.

J. Engineer shall not be responsible for any decision made regarding the Construction Contract Documents, or any application, interpretation, clarification, or modification of the Construction Contract Documents, other than those made by Engineer or its Consultants.

K. Engineer is not required to provide and does not have any responsibility for surety bonding or insurance-related advice, recommendations, counseling, or research, or enforcement of construction insurance or surety bonding requirements.

L. Engineer's services do not include providing legal advice or representation.

M. Engineer's services do not include (1) serving as a "municipal advisor" for purposes of the registration requirements of Section 975 of the Dodd-Frank Wall Street Reform and Consumer Protection Act (2010) or the municipal advisor registration rules issued by the Securities and Exchange Commission, or (2) advising Owner, or any municipal entity or other person or entity, regarding municipal financial products or the issuance of municipal securities, including advice with respect to the structure, timing, terms, or other similar matters concerning such products or issuances.

N. While at the Site, Engineer, its Consultants, and their employees and representatives shall comply with the applicable requirements of Contractor's and Owner's safety programs of which Engineer has been informed in writing.

6.02 *Design Without Construction Phase Services*

A. Engineer shall be responsible only for those Construction Phase services expressly required of Engineer in Exhibit A, Paragraph A1.05. With the exception of such expressly required services, Engineer shall have no design, Shop Drawing review, or other obligations during construction, and Owner assumes all responsibility for the application and interpretation of the Construction Contract Documents, review and response to Contractor claims, Construction Contract administration, processing of Change Orders and submittals, revisions to the Construction Contract Documents during construction, construction observation and review, review of Contractor's payment applications, and all other necessary Construction Phase administrative, engineering, and professional services. Owner waives all claims against the Engineer that may be connected in any way to Construction Phase administrative, engineering, or professional services except for those services that are expressly required of Engineer in Exhibit A.

6.03 *Use of Documents*

A. All Documents are instruments of service **for the project only and shall be deemed the joint property of the Engineer and Owner**~~, and Engineer shall retain an ownership and property interest therein (including the copyright and the right of reuse at the discretion of the Engineer)~~ whether or not the Project is completed.

B. If Engineer is required to prepare or furnish Drawings or Specifications under this Agreement, Engineer shall deliver to Owner at least one original printed record version of such Drawings and Specifications, signed and sealed according to applicable Laws and Regulations.

~~C. Owner may make and retain copies of Documents for information and reference in connection with the use of the Documents on the Project. Engineer grants Owner a limited license to use the Documents on the Project, extensions of the Project, and for related uses of the Owner, subject to~~

Copyright © 2013 National Society of Professional Engineers, American Council of Engineering Companies, and American Society of Civil Engineers. All rights reserved.

~~receipt by Engineer of full payment due and owing for all services relating to preparation of the Documents, and subject to the following limitations: (1) Owner acknowledges that such Documents are not intended or represented to be suitable for use on the Project unless completed by Engineer, or for use or reuse by Owner or others on extensions of the Project, on any other project, or for any other use or purpose, without written verification or adaptation by Engineer; (2) any such use or reuse, or any modification of the Documents, without written verification, completion, or adaptation by Engineer, as appropriate for the specific purpose intended, will be at Owner's sole risk and without liability or legal exposure to Engineer or to its officers, directors, members, partners, agents, employees, and Consultants; (3) Owner shall indemnify and hold harmless Engineer and its officers, directors, members, partners, agents, employees, and Consultants from all claims, damages, losses, and expenses, including attorneys' fees, arising out of or resulting from any use, reuse, or modification of the Documents without written verification, completion, or adaptation by Engineer; and (4) such limited license to Owner shall not create any rights in third parties.~~ **All raw data, studies, reports, and other work products of Engineer for this project ("Project Documents") are instruments of service for the project only and shall be deemed the joint property of Engineer and Owner whether the project is completed or not. The Owner may make and retain copies of the Project Documents which may be used by the Owner. Both Engineer and Owner may use the Project Documents for their own purposes outside of the project when appropriate. However, the Project Documents are not intended or represented to be suitable for reuse by the Owner or others on extensions of the project or on any other project. Any such use without written verification or adaptation by Engineer for the specific purpose intended will be at Owner's sole risk and without liability or legal exposure to Engineer and the Owner shall indemnify and hold harmless Engineer and their consultants and each of their officers, agents, and employees from any and all liability claims, losses, damage and expenses, including attorney's fees, arising out of or resulting from the negligent use or intentional misuse of the Project Documents by Owner.**

D. If Engineer at Owner's request verifies the suitability of the Documents, completes them, or adapts them for extensions of the Project or for any other purpose, then Owner shall compensate Engineer at rates or in an amount to be agreed upon by Owner and Engineer.

6.04 *Electronic Transmittals*

A. Owner and Engineer may transmit, and shall accept, Project-related correspondence, Documents, text, data, drawings, information, and graphics, in electronic media or digital format, either directly, or through access to a secure Project website, in accordance with a mutually agreeable protocol.

B. If this Agreement does not establish protocols for electronic or digital transmittals, then Owner and Engineer ~~shall~~ **may** jointly develop such protocols.

C. When transmitting items in electronic media or digital format, the transmitting party makes no representations as to long term compatibility, usability, or readability of the items resulting from the recipient's use of software application packages, operating systems, or computer hardware differing from those used in the drafting or transmittal of the items, or from those established in applicable transmittal protocols.

6.05 *Insurance*

A. Engineer shall procure and maintain insurance as set forth in Exhibit G. ~~Engineer shall cause Owner to be listed as an additional insured on any applicable general liability insurance policy carried by Engineer.~~

Copyright © 2013 National Society of Professional Engineers, American Council of Engineering Companies, and American Society of Civil Engineers. All rights reserved.

B. Owner shall procure and maintain insurance as set forth in Exhibit G. ~~Owner shall cause Engineer and its Consultants to be listed as additional insureds on any general liability policies carried by Owner, which are applicable to the Project.~~

C. Owner shall require Contractor to purchase and maintain policies of insurance covering workers' compensation, general liability, motor vehicle damage and injuries, and other insurance necessary to protect Owner's and Engineer's interests in the Project. Owner shall require Contractor to cause Engineer and its Consultants to be listed as additional insureds with respect to such liability insurance purchased and maintained by Contractor for the Project.

D. Owner and Engineer shall each deliver to the other certificates of insurance evidencing the coverages indicated in Exhibit G. Such certificates shall be furnished prior to commencement of Engineer's services and at renewals thereafter during the life of the Agreement.

~~E. All policies of property insurance relating to the Project, including but not limited to any builder's risk policy, shall allow for waiver of subrogation rights and contain provisions to the effect that in the event of payment of any loss or damage the insurers will have no rights of recovery against any insured thereunder or against Engineer or its Consultants. Owner and Engineer waive all rights against each other, Contractor, the Consultants, and the respective officers, directors, members, partners, employees, agents, consultants, and subcontractors of each and any of them, for all losses and damages caused by, arising out of, or resulting from any of the perils or causes of loss covered by any builder's risk policy and any other property insurance relating to the Project. Owner and Engineer shall take appropriate measures in other Project-related contracts to secure waivers of rights consistent with those set forth in this paragraph.~~

F. All policies of insurance shall contain a provision or endorsement that the coverage afforded will not be canceled or reduced in limits by endorsement, and that renewal will not be refused, until at least 10 days prior written notice has been given to the primary insured. Upon receipt of such notice, the receiving party shall promptly forward a copy of the notice to the other party to this Agreement.

G. At any time, Owner may request that Engineer or its Consultants, at Owner's sole expense, provide additional insurance coverage, increased limits, or revised deductibles that are more protective than those specified in Exhibit G. If so requested by Owner, and if commercially available, Engineer shall obtain and shall require its Consultants to obtain such additional insurance coverage, different limits, or revised deductibles for such periods of time as requested by Owner, and Exhibit G will be supplemented to incorporate these requirements.

6.06 *Suspension and Termination*

A. *Suspension:*

1. *By Owner*: Owner may suspend the Project for up to 90 days upon seven days written notice to Engineer.

2. *By Engineer*: Engineer may, after giving seven days written notice to Owner, suspend services under this Agreement if Owner has failed to pay Engineer for invoiced services and expenses, as set forth in Paragraph 4.02.B, or in response to the presence of Constituents of Concern at the Site, as set forth in Paragraph 6.10.D.

B. *Termination*: The obligation to provide further services under this Agreement may be terminated:

1. For cause,

Copyright © 2013 National Society of Professional Engineers, American Council of Engineering Companies, and American Society of Civil Engineers. All rights reserved.

a. by either party upon 30 days written notice in the event of substantial failure by the other party to perform in accordance with the terms hereof through no fault of the terminating party.

b. by Engineer:

1) upon seven days written notice if Owner demands that Engineer furnish or perform services contrary to Engineer's responsibilities as a licensed professional; or

2) upon seven days written notice if the Engineer's services for the Project are delayed or suspended for more than 90 days for reasons beyond Engineer's control, or as the result of the presence at the Site of undisclosed Constituents of Concern, as set forth in Paragraph 6.10.D.

3) Engineer shall have no liability to Owner on account of such termination.

c. Notwithstanding the foregoing, this Agreement will not terminate under Paragraph 6.06.B.1.a if the party receiving such notice begins, within seven days of receipt of such notice, to correct its substantial failure to perform and proceeds diligently to cure such failure within no more than 30 days of receipt thereof; provided, however, that if and to the extent such substantial failure cannot be reasonably cured within such 30 day period, and if such party has diligently attempted to cure the same and thereafter continues diligently to cure the same, then the cure period provided for herein shall extend up to, but in no case more than, 60 days after the date of receipt of the notice.

2. For convenience, by Owner effective upon Engineer's receipt of notice from Owner.

C. *Effective Date of Termination:* The terminating party under Paragraph 6.06.B may set the effective date of termination at a time up to 30 days later than otherwise provided to allow Engineer to demobilize personnel and equipment from the Site, to complete tasks whose value would otherwise be lost, to prepare notes as to the status of completed and uncompleted tasks, and to assemble Project materials in orderly files.

D. *Payments Upon Termination:*

1. In the event of any termination under Paragraph 6.06, Engineer will be entitled to invoice Owner and to receive full payment for all services performed or furnished in accordance with this Agreement and all Reimbursable Expenses incurred through the effective date of termination. Upon making such payment, Owner shall have the limited right to the use of Documents, at Owner's sole risk, subject to the provisions of Paragraph 6.03.

2. In the event of termination by Owner for convenience or by Engineer for cause, Engineer shall be entitled, in addition to invoicing for those items identified in Paragraph 6.06.D.1, to invoice Owner and receive payment of a reasonable amount for services and expenses directly attributable to termination, both before and after the effective date of termination, such as reassignment of personnel, costs of terminating contracts with Engineer's Consultants, and other related close-out costs, using methods and rates for Additional Services as set forth in Exhibit C.

6.07 *Controlling Law*

A. This Agreement is to be governed by the Laws and Regulations of the state in which the Project is located.

Copyright © 2013 National Society of Professional Engineers, American Council of Engineering Companies, and American Society of Civil Engineers. All rights reserved.

6.08 *Successors, Assigns, and Beneficiaries*

A. Owner and Engineer are hereby bound and the successors, executors, administrators, and legal representatives of Owner and Engineer (and to the extent permitted by Paragraph 6.08.B the assigns of Owner and Engineer) are hereby bound to the other party to this Agreement and to the successors, executors, administrators and legal representatives (and said assigns) of such other party, in respect of all covenants, agreements, and obligations of this Agreement.

B. Neither Owner nor Engineer may assign, sublet, or transfer any rights under or interest (including, but without limitation, money that is due or may become due) in this Agreement without the written consent of the other party, except to the extent that any assignment, subletting, or transfer is mandated by law. Unless specifically stated to the contrary in any written consent to an assignment, no assignment will release or discharge the assignor from any duty or responsibility under this Agreement.

C. Unless expressly provided otherwise in this Agreement:

1. Nothing in this Agreement shall be construed to create, impose, or give rise to any duty owed by Owner or Engineer to any Constructor, other third-party individual or entity, or to any surety for or employee of any of them.

2. All duties and responsibilities undertaken pursuant to this Agreement will be for the sole and exclusive benefit of Owner and Engineer and not for the benefit of any other party.

3. Owner agrees that the substance of the provisions of this Paragraph 6.08.C shall appear in the Construction Contract Documents.

6.09 *Dispute Resolution*

A. Owner and Engineer agree to negotiate all disputes between them in good faith for a period of 30 days from the date of notice prior to invoking the procedures of Exhibit H or other provisions of this Agreement, or exercising their rights at law.

B. If the parties fail to resolve a dispute through negotiation under Paragraph 6.09.A, then either or both may invoke the procedures of Exhibit H. If Exhibit H is not included, or if no dispute resolution method is specified in Exhibit H, then the parties may exercise their rights at law.

6.10 *Environmental Condition of Site*

A. Owner represents to Engineer that as of the Effective Date to the best of Owner's knowledge no Constituents of Concern, other than those disclosed in writing to Engineer, exist at or adjacent to the Site.

B. If Engineer encounters or learns of an undisclosed Constituent of Concern at the Site, then Engineer shall notify (1) Owner and (2) appropriate governmental officials if Engineer reasonably concludes that doing so is required by applicable Laws or Regulations.

C. It is acknowledged by both parties that Engineer's scope of services does not include any services related to unknown or undisclosed Constituents of Concern. If Engineer or any other party encounters, uncovers, or reveals an undisclosed Constituent of Concern, then Owner shall promptly determine whether to retain a qualified expert to evaluate such condition or take any necessary corrective action.

Copyright © 2013 National Society of Professional Engineers, American Council of Engineering Companies, and American Society of Civil Engineers. All rights reserved.

D. If investigative or remedial action, or other professional services, are necessary with respect to undisclosed Constituents of Concern, or if investigative or remedial action beyond that reasonably contemplated is needed to address a disclosed or known Constituent of Concern, then Engineer may, at its option and without liability for consequential or any other damages, suspend performance of services on the portion of the Project affected thereby until such portion of the Project is no longer affected.

E. If the presence at the Site of undisclosed Constituents of Concern adversely affects the performance of Engineer's services under this Agreement, then the Engineer shall have the option of (1) accepting an equitable adjustment in its compensation or in the time of completion, or both; or (2) terminating this Agreement for cause on seven days notice.

F. Owner acknowledges that Engineer is performing professional services for Owner and that Engineer is not and shall not be required to become an "owner," "arranger," "operator," "generator," or "transporter" of hazardous substances, as defined in the Comprehensive Environmental Response, Compensation, and Liability Act (CERCLA), as amended, which are or may be encountered at or near the Site in connection with Engineer's activities under this Agreement.

6.11 *Indemnification and Mutual Waiver*

A. *Indemnification by Engineer:* To the fullest extent permitted by Laws and Regulations, Engineer shall indemnify and hold harmless Owner, and Owner's officers, directors, members, partners, agents, consultants, and employees, from losses, damages, and judgments (including reasonable consultants' and attorneys' fees and expenses) arising from third-party claims or actions relating to the Project, provided that any such claim, action, loss, damages, or judgment is attributable to bodily injury, sickness, disease, or death, or to injury to or destruction of tangible property (other than the Work itself), including the loss of use resulting therefrom, but only to the extent caused by any negligent act or omission of Engineer or Engineer's officers, directors, members, partners, agents, employees, or Consultants. **This indemnification provision is subject to and limited by the provisions, if any, agreed to by Owner and Engineer in Exhibit I, "Limitations of Liability."**

B. *Indemnification by Owner:* Owner shall indemnify and hold harmless Engineer and its officers, directors, members, partners, agents, employees, and Consultants as required by Laws and Regulations **and to the extent (if any) required in Exhibit I, "Limitations of Liability." Nevertheless, for this and all other instances of indemnification/hold harmless provisions in this Agreement, the extent of Owner's obligation is limited in that Owner does not waive its sovereign immunity and the Owner reserves the right to rely on sovereign immunity to the extent permitted by South Dakota Law.**

C. *Environmental Indemnification:* To the fullest extent permitted by Laws and Regulations, Owner shall indemnify and hold harmless Engineer and its officers, directors, members, partners, agents, employees, and Consultants from all claims, costs, losses, damages, actions, and judgments (including reasonable consultants' and attorneys' fees and expenses) caused by, arising out of, relating to, or resulting from a Constituent of Concern at, on, or under the Site, provided that (1) any such claim, cost, loss, damages, action, or judgment is attributable to bodily injury, sickness, disease, or death, or to injury to or destruction of tangible property (other than the Work itself), including the loss of use resulting therefrom, and (2) nothing in this paragraph shall obligate Owner to indemnify any individual or entity from and against the consequences of that individual's or entity's own negligence or willful misconduct.

D. *No Defense Obligation:* The indemnification commitments in this Agreement do not include a defense obligation by the indemnitor unless such obligation is expressly stated.

Copyright © 2013 National Society of Professional Engineers, American Council of Engineering Companies, and American Society of Civil Engineers. All rights reserved.

E. *Percentage Share of Negligence:* To the fullest extent permitted by Laws and Regulations, a party's total liability to the other party and anyone claiming by, through, or under the other party for any cost, loss, or damages caused in part by the negligence of the party and in part by the negligence of the other party or any other negligent entity or individual, shall not exceed the percentage share that the party's negligence bears to the total negligence of Owner, Engineer, and all other negligent entities and individuals.

F. *Mutual Waiver:* To the fullest extent permitted by Laws and Regulations, Owner and Engineer waive against each other, and the other's employees, officers, directors, members, agents, insurers, partners, and consultants, any and all claims for or entitlement to special, incidental, indirect, or consequential damages arising out of, resulting from, or in any way related to this Agreement or the Project, from any cause or causes.

6.12 *Records Retention*

A. Engineer shall maintain on file in legible form, for a period of five years following completion or termination of its services, all Documents, records (including cost records), and design calculations related to Engineer's services or pertinent to Engineer's performance under this Agreement. Upon Owner's request, Engineer shall provide a copy of any such item to Owner at cost.

6.13 *Miscellaneous Provisions*

A. *Notices:* Any notice required under this Agreement will be in writing, addressed to the appropriate party at its address on the signature page and given personally, by registered or certified mail postage prepaid, or by a commercial courier service. All notices shall be effective upon the date of receipt.

B. *Survival:* All express representations, waivers, indemnifications, and limitations of liability included in this Agreement will survive its completion or termination for any reason.

C. *Severability:* Any provision or part of the Agreement held to be void or unenforceable under any Laws or Regulations shall be deemed stricken, and all remaining provisions shall continue to be valid and binding upon Owner and Engineer, which agree that the Agreement shall be reformed to replace such stricken provision or part thereof with a valid and enforceable provision that comes as close as possible to expressing the intention of the stricken provision.

D. *Waiver:* A party's non-enforcement of any provision shall not constitute a waiver of that provision, nor shall it affect the enforceability of that provision or of the remainder of this Agreement.

E. *Accrual of Claims:* To the fullest extent permitted by Laws and Regulations, all causes of action arising under this Agreement shall be deemed to have accrued, and all statutory periods of limitation shall commence, no later than the date of Substantial Completion.

ARTICLE 7 – DEFINITIONS

7.01 *Defined Terms*

A. Wherever used in this Agreement (including the Exhibits hereto) terms (including the singular and plural forms) printed with initial capital letters have the meanings indicated in the text above, in the exhibits, or in the following definitions:

1. *Addenda*—Written or graphic instruments issued prior to the opening of bids which clarify, correct, or change the bidding requirements or the proposed Construction Contract Documents.

Copyright © 2013 National Society of Professional Engineers, American Council of Engineering Companies, and American Society of Civil Engineers. All rights reserved.

2. *Additional Services*—The services to be performed for or furnished to Owner by Engineer in accordance with Part 2 of Exhibit A of this Agreement.

3. *Agreement*—This written contract for professional services between Owner and Engineer, including all exhibits identified in Paragraph 8.01 and any duly executed amendments.

4. *Application for Payment*—The form acceptable to Engineer which is to be used by Contractor during the course of the Work in requesting progress or final payments and which is to be accompanied by such supporting documentation as is required by the Construction Contract.

5. *Basic Services*—The services to be performed for or furnished to Owner by Engineer in accordance with Part 1 of Exhibit A of this Agreement.

6. *Change Order*—A document which is signed by Contractor and Owner and authorizes an addition, deletion, or revision in the Work or an adjustment in the Construction Contract Price or the Construction Contract Times, or other revision to the Construction Contract, issued on or after the effective date of the Construction Contract.

7. *Change Proposal*—A written request by Contractor, duly submitted in compliance with the procedural requirements set forth in the Construction Contract, seeking an adjustment in Construction Contract Price or Construction Contract Times, or both; contesting an initial decision by Engineer concerning the requirements of the Construction Contract Documents or the acceptability of Work under the Construction Contract Documents; challenging a set-off against payments due; or seeking other relief with respect to the terms of the Construction Contract.

8. *Constituent of Concern*—Asbestos, petroleum, radioactive material, polychlorinated biphenyls (PCBs), hazardous waste, and any substance, product, waste, or other material of any nature whatsoever that is or becomes listed, regulated, or addressed pursuant to (a) the Comprehensive Environmental Response, Compensation and Liability Act, 42 U.S.C. §§9601 et seq. ("CERCLA"); (b) the Hazardous Materials Transportation Act, 49 U.S.C. §§5501 et seq.; (c) the Resource Conservation and Recovery Act, 42 U.S.C. §§6901 et seq. ("RCRA"); (d) the Toxic Substances Control Act, 15 U.S.C. §§2601 et seq.; (e) the Clean Water Act, 33 U.S.C. §§1251 et seq.; (f) the Clean Air Act, 42 U.S.C. §§7401 et seq.; or (g) any other federal, State, or local statute, law, rule, regulation, ordinance, resolution, code, order, or decree regulating, relating to, or imposing liability or standards of conduct concerning, any hazardous, toxic, or dangerous waste, substance, or material.

9. *Construction Contract*—The entire and integrated written contract between the Owner and Contractor concerning the Work.

10. *Construction Contract Documents*—Those items designated as "Contract Documents" in the Construction Contract, and which together comprise the Construction Contract.

11. *Construction Contract Price*—The money that Owner has agreed to pay Contractor for completion of the Work in accordance with the Construction Contract Documents.

12. *Construction Contract Times*—The number of days or the dates by which Contractor shall: (a) achieve milestones, if any, in the Construction Contract; (b) achieve Substantial Completion; and (c) complete the Work.

13. *Construction Cost*—The cost to Owner of the construction of those portions of the entire Project designed or specified by or for Engineer under this Agreement, including construction labor,

Copyright © 2013 National Society of Professional Engineers, American Council of Engineering Companies, and American Society of Civil Engineers. All rights reserved.

services, materials, equipment, insurance, and bonding costs, and allowances for contingencies. Construction Cost does not include costs of services of Engineer or other design professionals and consultants; cost of land or rights-of-way, or compensation for damages to property; Owner's costs for legal, accounting, insurance counseling, or auditing services; interest or financing charges incurred in connection with the Project; or the cost of other services to be provided by others to Owner. Construction Cost is one of the items comprising Total Project Costs.

14. *Constructor*—Any person or entity (not including the Engineer, its employees, agents, representatives, and Consultants), performing or supporting construction activities relating to the Project, including but not limited to Contractors, Subcontractors, Suppliers, Owner's work forces, utility companies, other contractors, construction managers, testing firms, shippers, and truckers, and the employees, agents, and representatives of any or all of them.

15. *Consultants*—Individuals or entities having a contract with Engineer to furnish services with respect to this Project as Engineer's independent professional associates and consultants; subcontractors; or vendors.

16. *Contractor*—The entity or individual with which Owner enters into a Construction Contract.

17. *Documents*—Data, reports, Drawings, Specifications, Record Drawings, building information models, civil integrated management models, and other deliverables, whether in printed or electronic format, provided or furnished in appropriate phases by Engineer to Owner pursuant to this Agreement.

18. *Drawings*—That part of the Construction Contract Documents that graphically shows the scope, extent, and character of the Work to be performed by Contractor.

19. *Effective Date*—The date indicated in this Agreement on which it becomes effective, but if no such date is indicated, the date on which this Agreement is signed and delivered by the last of the parties to sign and deliver.

20. *Engineer*—The individual or entity named as such in this Agreement.

21. *Field Order*—A written order issued by Engineer which requires minor changes in the Work but does not change the Construction Contract Price or the Construction Contract Times.

22. *Laws and Regulations; Laws or Regulations*—Any and all applicable laws, statutes, rules, regulations, ordinances, codes, and orders of any and all governmental bodies, agencies, authorities, and courts having jurisdiction.

23. *Owner*—The individual or entity named as such in this Agreement and for which Engineer's services are to be performed. Unless indicated otherwise, this is the same individual or entity that will enter into any Construction Contracts concerning the Project.

24. *Project*—The total undertaking to be accomplished for Owner by engineers, contractors, and others, including planning, study, design, construction, testing, commissioning, and start-up, and of which the services to be performed or furnished by Engineer under this Agreement are a part.

25. *Record Drawings*—Drawings depicting the completed Project, or a specific portion of the completed Project, prepared by Engineer as an Additional Service and based on Contractor's record copy of all Drawings, Specifications, Addenda, Change Orders, Work Change Directives, Field Orders, and written interpretations and clarifications, as delivered to Engineer and annotated by Contractor to show changes made during construction.

Copyright © 2013 National Society of Professional Engineers, American Council of Engineering Companies, and American Society of Civil Engineers. All rights reserved.

26. *Reimbursable Expenses*—The expenses incurred directly by Engineer in connection with the performing or furnishing of Basic Services and Additional Services for the Project.

27. *Resident Project Representative*—The authorized representative of Engineer assigned to assist Engineer at the Site during the Construction Phase. As used herein, the term Resident Project Representative or "RPR" includes any assistants or field staff of Resident Project Representative. The duties and responsibilities of the Resident Project Representative, if any, are as set forth in Exhibit D.

28. *Samples*—Physical examples of materials, equipment, or workmanship that are representative of some portion of the Work and that establish the standards by which such portion of the Work will be judged.

29. *Shop Drawings*—All drawings, diagrams, illustrations, schedules, and other data or information that are specifically prepared or assembled by or for Contractor and submitted by Contractor to illustrate some portion of the Work. Shop Drawings, whether approved or not, are not Drawings and are not Construction Contract Documents.

30. *Site*—Lands or areas to be indicated in the Construction Contract Documents as being furnished by Owner upon which the Work is to be performed, including rights-of-way and easements, and such other lands furnished by Owner which are designated for the use of Contractor.

31. *Specifications*—The part of the Construction Contract Documents that consists of written requirements for materials, equipment, systems, standards, and workmanship as applied to the Work, and certain administrative requirements and procedural matters applicable to the Work.

32. *Subcontractor*—An individual or entity having a direct contract with Contractor or with any other Subcontractor for the performance of a part of the Work.

33. *Substantial Completion*—The time at which the Work (or a specified part thereof) has progressed to the point where, in the opinion of Engineer, the Work (or a specified part thereof) is sufficiently complete, in accordance with the Construction Contract Documents, so that the Work (or a specified part thereof) can be utilized for the purposes for which it is intended. The terms "substantially complete" and "substantially completed" as applied to all or part of the Work refer to Substantial Completion thereof.

34. *Supplier*—A manufacturer, fabricator, supplier, distributor, materialman, or vendor having a direct contract with Contractor or with any Subcontractor to furnish materials or equipment to be incorporated in the Work by Contractor or a Subcontractor.

35. *Total Project Costs*—The total cost of planning, studying, designing, constructing, testing, commissioning, and start-up of the Project, including Construction Cost and all other Project labor, services, materials, equipment, insurance, and bonding costs, allowances for contingencies, and the total costs of services of Engineer or other design professionals and consultants, together with such other Project-related costs that Owner furnishes for inclusion, including but not limited to cost of land, rights-of-way, compensation for damages to properties, Owner's costs for legal, accounting, insurance counseling, and auditing services, interest and financing charges incurred in connection with the Project, and the cost of other services to be provided by others to Owner.

36. *Work*—The entire construction or the various separately identifiable parts thereof required to be provided under the Construction Contract Documents. Work includes and is the result of performing or providing all labor, services, and documentation necessary to produce such construction; furnishing, installing, and incorporating all materials and equipment into such

Copyright © 2013 National Society of Professional Engineers, American Council of Engineering Companies, and American Society of Civil Engineers. All rights reserved.

construction; and may include related services such as testing, start-up, and commissioning, all as required by the Construction Contract Documents.

37. *Work Change Directive*—A written directive to Contractor issued on or after the effective date of the Construction Contract, signed by Owner and recommended by Engineer, ordering an addition, deletion, or revision in the Work.

B. *Day*:

1. The word "day" means a calendar day of 24 hours measured from midnight to the next midnight.

ARTICLE 8 – EXHIBITS AND SPECIAL PROVISIONS

8.01 *Exhibits Included:*

A. Exhibit A, Engineer's Services.

B. Exhibit B, Owner's Responsibilities.

C. Exhibit C, Payments to Engineer for Services and Reimbursable Expenses.

D. Exhibit D, Duties, Responsibilities and Limitations of Authority of Resident Project Representative.

E. Exhibit E, Notice of Acceptability of Work.

F. Exhibit F, Construction Cost Limit. **"not used"**

G. Exhibit G, Insurance.

H. Exhibit H, Dispute Resolution. **"not used"**

I. Exhibit I, Limitations of Liability.

J. Exhibit J, Special Provisions. **"not used"**

K. Exhibit K, Amendment to Owner-Engineer Agreement.

8.02 *Total Agreement*

A. This Agreement, (together with the exhibits included above) constitutes the entire agreement between Owner and Engineer and supersedes all prior written or oral understandings. This Agreement may only be amended, supplemented, modified, or canceled by a written instrument duly executed by both parties. Amendments should be based whenever possible on the format of Exhibit K to this Agreement.

8.03 *Designated Representatives*

A. With the execution of this Agreement, Engineer and Owner shall designate specific individuals to act as Engineer's and Owner's representatives with respect to the services to be performed or furnished by Engineer and responsibilities of Owner under this Agreement. Such an individual shall have authority to transmit instructions, receive information, and render decisions relative to this Agreement on behalf of the respective party whom the individual represents.

Copyright © 2013 National Society of Professional Engineers, American Council of Engineering Companies, and American Society of Civil Engineers. All rights reserved.

8.04 *Engineer's Certifications*

A. Engineer certifies that it has not engaged in corrupt, fraudulent, or coercive practices in competing for or in executing the Agreement. For the purposes of this Paragraph 8.04:

1. "corrupt practice" means the offering, giving, receiving, or soliciting of any thing of value likely to influence the action of a public official in the selection process or in the Agreement execution;

2. "fraudulent practice" means an intentional misrepresentation of facts made (a) to influence the selection process or the execution of the Agreement to the detriment of Owner, or (b) to deprive Owner of the benefits of free and open competition;

3. "coercive practice" means harming or threatening to harm, directly or indirectly, persons or their property to influence their participation in the selection process or affect the execution of the Agreement.

Copyright © 2013 National Society of Professional Engineers, American Council of Engineering Companies, and American Society of Civil Engineers. All rights reserved.

IN WITNESS WHEREOF, the parties hereto have executed this Agreement, the Effective Date of which is indicated on page 1.

Owner: City of Mitchell, South Dakota

By: _____
Print name: Jordan Hanson
Title: Mayor
Date Signed: _____

Address for Owner's receipt of notices:
City of Mitchell
612 North Main Street
Mitchell, South Dakota 57301-2620

Designated Representative (Paragraph 8.03.A):
Joe Schroeder
Title: Public Works Director/City Engineer
Phone Number: 605-995-8433
E-Mail Address: jschroeder@cityofmitchellsd.gov

ATTEST

By: _____
Print name: Michelle Bathke
Title: Finance Officer

Engineer: Schmucker, Paul, Nohr and Associates

By: _____
Print name: Jeffrey P. McCormick, P.E.
Title: Associate
Date Signed: _____

Engineer License Certificate No.: 8471
State of: South Dakota

Address for Engineer's receipt of notices:
PO Box 398
2100 North Sanborn Boulevard
Mitchell, South Dakota 57301

Designated Representative (Paragraph 8.03.A):
Jeffrey P. McCormick, P.E.
Title: Associate
Phone Number: 605-996-7761
E-Mail Address: jmccormick@spn-assoc.com

ATTEST

By: _____
Print name: Bob Babcock, P.E.
Title: Principal

Copyright © 2013 National Society of Professional Engineers, American Council of Engineering Companies, and American Society of Civil Engineers. All rights reserved.

THIS PAGE LEFT BLANK INTENTIONALLY

Copyright © 2013 National Society of Professional Engineers, American Council of Engineering Companies,
and American Society of Civil Engineers. All rights reserved.

This is **EXHIBIT A**, consisting of **16** pages, referred to in and part of the **Agreement between Owner and Engineer for Professional Services** dated **February 17, 2025**.

Engineer's Services

Article 1 of the Agreement is supplemented to include the following agreement of the parties.

Engineer shall provide Basic and Additional Services as set forth below.

PART 1 – BASIC SERVICES

A1.01 *Study and Report Phase*– **NOT APPLICABLE –**

~~A. Engineer shall:~~

~~1. Consult with Owner to define and clarify Owner's requirements for the Project, including design objectives and constraints, space, capacity and performance requirements, flexibility, and expandability, and any budgetary limitations, and identify available data, information, reports, facilities plans, and site evaluations.~~

~~a. If Owner has already identified one or more potential solutions to meet its Project requirements, then proceed with the study and evaluation of such potential solutions: [ ] *[List the specific potential solutions here.]*~~

~~b. If Owner has not identified specific potential solutions for study and evaluation, then assist Owner in determining whether Owner's requirements, and available data, reports, plans, and evaluations, point to a single potential solution for Engineer's study and evaluation, or are such that it will be necessary for Engineer to identify, study, and evaluate multiple potential solutions.~~

~~c. If it is necessary for Engineer to identify, study, and evaluate multiple potential solutions, then identify [ ] *[insert specific number]* alternative solutions potentially available to Owner, unless Owner and Engineer mutually agree that some other specific number of alternatives should be identified, studied, and evaluated.~~

~~2. Identify potential solution(s) to meet Owner's Project requirements, as needed.~~

~~3. Study and evaluate the potential solution(s) to meet Owner's Project requirements.~~

~~4. Visit the Site, or potential Project sites, to review existing conditions and facilities, unless such visits are not necessary or applicable to meeting the objectives of the Study and Report Phase.~~

~~5. Advise Owner of any need for Owner to obtain, furnish, or otherwise make available to Engineer additional Project-related data and information, for Engineer's use in the study and evaluation of potential solution(s) to Owner's Project requirements, and preparation of a related report.~~

~~6. After consultation with Owner, recommend to Owner the solution(s) which in Engineer's judgment meet Owner's requirements for the Project.~~

Copyright © 2013 National Society of Professional Engineers, American Council of Engineering Companies, and American Society of Civil Engineers. All rights reserved.

7. ~~Identify, consult with, and analyze requirements of governmental authorities having jurisdiction to approve the portions of the Project to be designed or specified by Engineer, including but not limited to mitigating measures identified in an environmental assessment for the Project.~~

8. ~~Prepare a report (the "Report") which will, as appropriate, contain schematic layouts, sketches, and conceptual design criteria with appropriate exhibits to indicate the agreed-to requirements, considerations involved, and Engineer's recommended solution(s). For each recommended solution Engineer will provide the following, which will be separately itemized: opinion of probable Construction Cost; proposed allowances for contingencies; the estimated total costs of design, professional, and related services to be provided by Engineer and its Consultants; and, on the basis of information furnished by Owner, a tabulation of other items and services included within the definition of Total Project Costs.~~

9. ~~Advise Owner of any need for Owner to provide data or services of the types described in Exhibit B, for use in Project design, or in preparation for Contractor selection and construction.~~

10. ~~When mutually agreed, assist Owner in evaluating the possible use of building information modeling; civil integrated management; geotechnical baselining of subsurface site conditions; innovative design, contracting, or procurement strategies; or other strategies, technologies, or techniques for assisting in the design, construction, and operation of Owner's facilities. The subject matter of this paragraph shall be referred to in Exhibit A and B as "Project Strategies, Technologies, and Techniques."~~

11. ~~If requested to do so by Owner, assist Owner in identifying opportunities for enhancing the sustainability of the Project, and pursuant to Owner's instructions plan for the inclusion of sustainable features in the design.~~

12. ~~Use ASCE 38, "Standard Guideline for the Collection and Depiction of Existing Subsurface Utility Data" as a means to advise the Owner on a recommended scope of work and procedure for the identification and mapping of existing utilities.~~

13. ~~Develop a scope of work and survey limits for any topographic and other surveys necessary for design.~~

14. ~~Perform or provide the following other Study and Report Phase tasks or deliverables: [ ] *[List any such tasks or deliverables here.]*~~

15. ~~Furnish [ ] review copies of the Report and any other Study and Report Phase deliverables to Owner within [ ] days of the Effective Date and review it with Owner. Within [ ] days of receipt, Owner shall submit to Engineer any comments regarding the furnished items.~~

16. ~~Revise the Report and any other Study and Report Phase deliverables in response to Owner's comments, as appropriate, and furnish [ ] copies of the revised Report and any other Study and Report Phase deliverables to the Owner within [ ] days of receipt of Owner's comments.~~

~~B. Engineer's services under the Study and Report Phase will be considered complete on the date when Engineer has delivered to Owner the revised Report and any other Study and Report Phase deliverables.~~

Copyright © 2013 National Society of Professional Engineers, American Council of Engineering Companies, and American Society of Civil Engineers. All rights reserved.

A1.02 *Preliminary Design Phase*

A. ~~After acceptance by Owner of the Report and any other Study and Report Phase deliverables; selection by Owner of a recommended solution; issuance by Owner of any instructions of for use of Project Strategies, Technologies, and Techniques, or for inclusion of sustainable features in the design; and indication by Owner of any specific modifications or changes in the scope, extent, character, or design requirements of the Project desired by Owner, (1) Engineer and Owner shall discuss and resolve any necessary revisions to Engineer's compensation (through application of the provisions regarding Additional Services, or otherwise), or the time for completion of Engineer's services, resulting from the selected solution, related Project Strategies, Technologies, or Techniques, sustainable design instructions, or specific modifications to the Project, and (2)~~ upon written authorization from Owner, Engineer shall:

1. Prepare Preliminary Design Phase documents consisting of final design criteria, preliminary drawings, outline specifications, and written descriptions of the Project.

2. In preparing the Preliminary Design Phase documents, use any specific applicable Project Strategies, Technologies, and Techniques authorized by Owner ~~during or following the Study and Report Phase~~, and include sustainable features, as appropriate, pursuant to Owner's instructions.

3. Provide necessary field surveys and topographic and utility mapping for Engineer's design purposes. ~~Comply with the scope of work and procedure for the identification and mapping of existing utilities selected and authorized by Owner pursuant to advice from Engineer based on ASCE 38, "Standard Guideline for the Collection and Depiction of Existing Subsurface Utility Data," as set forth in Paragraph A1.01.A.12 above. If no such scope of work and procedure for utility mapping has been selected and authorized, then at a minimum the utility mapping will include Engineer contacting utility owners and obtaining available information.~~

4. Visit the Site as needed to prepare the Preliminary Design Phase documents.

5. Advise Owner if additional reports, data, information, or services of the types described in Exhibit B are necessary and assist Owner in obtaining such reports, data, information, or services.

6. Continue to assist Owner with Project Strategies, Technologies, and Techniques that Owner has chosen to implement.

7. Based on the information contained in the Preliminary Design Phase documents, prepare a revised opinion of probable Construction Cost, and assist Owner in tabulating the various cost categories which comprise Total Project Costs.

8. Obtain and review Owner's instructions regarding Owner's procurement of construction services (including instructions regarding advertisements for bids, instructions to bidders, and requests for proposals, as applicable), Owner's construction contract practices and requirements, insurance and bonding requirements, electronic transmittals during construction, and other information necessary for the finalization of Owner's bidding-related documents (or requests for proposals or other construction procurement documents), and Construction Contract Documents. ~~Also obtain and review copies of Owner's design and construction standards, Owner's standard forms, general conditions (if other than EJCDC® C-700, Standard General Conditions of the Construction Contract, 2013 Edition), supplementary conditions, text, and related documents or content for Engineer to include in the draft bidding-related documents (or requests for proposals or other construction procurement documents), and in the draft Construction Contract Documents, when applicable.~~

Copyright © 2013 National Society of Professional Engineers, American Council of Engineering Companies, and American Society of Civil Engineers. All rights reserved.

9. Perform or provide the following other Preliminary Design Phase tasks or deliverables:

   a. N/A

10. Furnish [**3**] review copies of the Preliminary Design Phase documents, opinion of probable Construction Cost, and any other Preliminary Design Phase deliverables to Owner within [**30**] days of authorization to proceed with this phase, and review them with Owner. Within [**7**] days of receipt, Owner shall submit to Engineer any comments regarding the furnished items.

11. Revise the Preliminary Design Phase documents, opinion of probable Construction Cost, and any other Preliminary Design Phase deliverables in response to Owner's comments, as appropriate, and furnish to Owner [**3**] copies of the revised Preliminary Design Phase documents, revised opinion of probable Construction Cost, and any other deliverables within [**7**] days after receipt of Owner's comments.

B. Engineer's services under the Preliminary Design Phase will be considered complete on the date when Engineer has delivered to Owner the revised Preliminary Design Phase documents, revised opinion of probable Construction Cost, and any other Preliminary Design Phase deliverables.

A1.03 *Final Design Phase*

A. After acceptance by Owner of the Preliminary Design Phase documents, revised opinion of probable Construction Cost as determined in the Preliminary Design Phase, and any other Preliminary Design Phase deliverables, subject to any Owner-directed modifications or changes in the scope, extent, character, or design requirements of or for the Project, and upon written authorization from Owner, Engineer shall:

1. Prepare final Drawings and Specifications indicating the scope, extent, and character of the Work to be performed and furnished by Contractor.

2. Visit the Site as needed to assist in preparing the final Drawings and Specifications.

3. Provide technical criteria, written descriptions, and design data for Owner's use in filing applications for permits from or approvals of governmental authorities having jurisdiction to review or approve the final design; assist Owner in consultations with such authorities; and revise the Drawings and Specifications in response to directives from such authorities, as appropriate.

4. Advise Owner of any recommended adjustments to the opinion of probable Construction Cost.

5. After consultation with Owner, include in the Construction Contract Documents any specific protocols for the transmittal of Project-related correspondence, documents, text, data, drawings, information, and graphics, in electronic media or digital format, either directly, or through access to a secure Project website. Any such protocols shall be applicable to transmittals between and among Owner, Engineer, and Contractor during the Construction Phase and Post-Construction Phase, and unless agreed otherwise shall supersede any conflicting protocols previously established for transmittals between Owner and Engineer.

6. Assist Owner in assembling known reports and drawings of Site conditions, and in identifying the technical data contained in such reports and drawings upon which bidders or other prospective contractors may rely.

Copyright © 2013 National Society of Professional Engineers, American Council of Engineering Companies, and American Society of Civil Engineers. All rights reserved.

7. In addition to preparing the final Drawings and Specifications, assemble drafts of other Construction Contract Documents based on specific instructions and contract forms, text, or content received from Owner.

8. Prepare or assemble draft bidding-related documents (or requests for proposals or other construction procurement documents), based on the specific bidding or procurement-related instructions and forms, text, or content received from Owner.

9. Perform or provide the following other Final Design Phase tasks or deliverables: **[*N/A.*]**

10. Furnish for review by Owner, its legal counsel, and other advisors, [**5**] copies of the final Drawings and Specifications, assembled drafts of other Construction Contract Documents, the draft bidding-related documents (or requests for proposals or other construction procurement documents), and any other Final Design Phase deliverables, within [**15**] calendar days of authorization to proceed with the Final Design Phase, and review them with Owner. Within **7** calendar days of receipt, Owner shall submit to Engineer any comments regarding the furnished items, and any instructions for revisions.

11. Revise the final Drawings and Specifications, assembled drafts of other Construction Contract Documents, the draft bidding-related documents (or requests for proposals or other construction procurement documents), and any other Final Design Phase deliverables in accordance with comments and instructions from the Owner **(Civil 3D Drawings)**, as appropriate, and submit [**5**] final copies of such documents to Owner within [**7**] calendar days after receipt of Owner's comments and instructions.

B. Engineer's services under the Final Design Phase will be considered complete on the date when Engineer has delivered to Owner the final Drawings and Specifications, other assembled Construction Contract Documents, bidding-related documents (or requests for proposals or other construction procurement documents), and any other Final Design Phase deliverables.

C. In the event that the Work designed or specified by Engineer is to be performed or furnished under more than one prime contract, or if Engineer's services are to be separately sequenced with the work of one or more prime Contractors (such as in the case of fast-tracking), Owner and Engineer shall, prior to commencement of the Final Design Phase, develop a schedule for performance of Engineer's services during the Final Design, Bidding or Negotiating, Construction, and Post-Construction Phases in order to sequence and coordinate properly such services as are applicable to the work under such separate prime contracts. This schedule is to be prepared and included in or become an amendment to Exhibit A whether or not the work under such contracts is to proceed concurrently.

D. The number of prime contracts for Work designed or specified by Engineer upon which the Engineer's compensation has been established under this Agreement is [**1**]. If more prime contracts are awarded, Engineer shall be entitled to an equitable increase in its compensation under this Agreement.

A1.04 *Bidding or Negotiating Phase*

A. After acceptance by Owner of the final Drawings and Specifications, other Construction Contract Documents, bidding-related documents (or requests for proposals or other construction procurement documents), and the most recent opinion of probable Construction Cost as determined in the Final Design Phase, and upon written authorization by Owner to proceed, Engineer shall:

Copyright © 2013 National Society of Professional Engineers, American Council of Engineering Companies, and American Society of Civil Engineers. All rights reserved.

1. Assist Owner in advertising for and obtaining bids or proposals for the Work, assist Owner in issuing assembled design, contract, and bidding-related documents (or requests for proposals or other construction procurement documents) to prospective contractors, and, where applicable, maintain a record of prospective contractors to which documents have been issued, attend pre-bid conferences, if any, and receive and process contractor deposits or charges for the issued documents.

2. Prepare and issue Addenda as appropriate to clarify, correct, or change the issued documents.

3. Provide information or assistance needed by Owner in the course of any review of proposals or negotiations with prospective contractors.

4. Consult with Owner as to the qualifications of prospective contractors.

5. Consult with Owner as to the qualifications of subcontractors, suppliers, and other individuals and entities proposed by prospective contractors, for those portions of the Work as to which review of qualifications is required by the issued documents.

6. If the issued bidding documents require, the Engineer shall evaluate and determine the acceptability of "or equals" and substitute materials and equipment proposed by prospective contractors, provided that such proposals are allowed by the bidding-related documents (or requests for proposals or other construction procurement documents) prior to award of contracts for the Work. Services under this paragraph are subject to the provisions of Paragraph A2.02.A.2 of this Exhibit A.

7. Attend the bid opening, prepare bid tabulation sheets to meet Owner's schedule, and assist Owner in evaluating bids or proposals, assembling final contracts for the Work for execution by Owner and Contractor, and in issuing notices of award of such contracts.

8. If Owner engages in negotiations with bidders or proposers, assist Owner with respect to technical and engineering issues that arise during the negotiations.

9. Perform or provide the following other Bidding or Negotiating Phase tasks or deliverables: ***[N/A.]***

B. The Bidding or Negotiating Phase will be considered complete upon commencement of the Construction Phase or upon cessation of negotiations with prospective contractors (except as may be required if Exhibit F is a part of this Agreement).

Copyright © 2013 National Society of Professional Engineers, American Council of Engineering Companies, and American Society of Civil Engineers. All rights reserved.

A1.05 *Construction Phase*

A. Upon successful completion of the Bidding and Negotiating Phase, and upon written authorization from Owner, Engineer shall:

1. *General Administration of Construction Contract:* Consult with Owner and act as Owner's representative as provided in the Construction Contract. The extent and limitations of the duties, responsibilities, and authority of Engineer shall be as assigned in EJCDC® C-700, Standard General Conditions of the Construction Contract (2013 Edition), prepared by the Engineers Joint Contract Documents Committee, or other construction general conditions specified in this Agreement. If Owner, or Owner and Contractor, modify the duties, responsibilities, and authority of Engineer in the Construction Contract, or modify other terms of the Construction Contract having a direct bearing on Engineer, then Owner shall compensate Engineer for any related increases in the cost to provide Construction Phase services. Engineer shall not be required to furnish or perform services contrary to Engineer's responsibilities as a licensed professional. All of Owner's instructions to Contractor will be issued through Engineer, which shall have authority to act on behalf of Owner in dealings with Contractor to the extent provided in this Agreement and the Construction Contract except as otherwise provided in writing.

2. *Resident Project Representative (RPR):* Provide the services of an RPR at the Site to assist the Engineer and to provide more extensive observation of Contractor's work. Duties, responsibilities, and authority of the RPR are as set forth in Exhibit D. The furnishing of such RPR's services will not limit, extend, or modify Engineer's responsibilities or authority except as expressly set forth in Exhibit D.

3. *Selection of Independent Testing Laboratory:* Assist Owner in the selection of an independent testing laboratory to perform the services identified in Exhibit B, Paragraph B2.01.

4. *Pre-Construction Conference:* Participate in a pre-construction conference prior to commencement of Work at the Site.

5. *Electronic Transmittal Protocols:* If the Construction Contract Documents do not specify protocols for the transmittal of Project-related correspondence, documents, text, data, drawings, information, and graphics, in electronic media or digital format, either directly, or through access to a secure Project website, then together with Owner and Contractor jointly develop such protocols for transmittals between and among Owner, Contractor, and Engineer during the Construction Phase and Post-Construction Phase.

6. *Original Documents:* If requested by Owner to do so, Maintain and safeguard during the Construction Phase at least one original printed record version of the Construction Contract Documents, including Drawings and Specifications signed and sealed by Engineer and other design professionals in accordance with applicable Laws and Regulations. Throughout the Construction Phase, make such original printed record version of the Construction Contract Documents available to Contractor and Owner for review.

7. *Schedules:* Receive, review, and determine the acceptability of any and all schedules that Contractor is required to submit to Engineer, including the Progress Schedule, Schedule of Submittals, and Schedule of Values.

8. *Baselines and Benchmarks:* As appropriate, establish baselines and benchmarks for locating the Work which in Engineer's judgment are necessary to enable Contractor to proceed.

Copyright © 2013 National Society of Professional Engineers, American Council of Engineering Companies, and American Society of Civil Engineers. All rights reserved.

9. *Visits to Site and Observation of Construction:* In connection with observations of Contractor's Work while it is in progress:

   a. Make visits to the Site at intervals appropriate to the various stages of construction, as Engineer deems necessary, to observe as an experienced and qualified design professional the progress of Contractor's executed Work. Such visits and observations by Engineer, and the Resident Project Representative, if any, are not intended to be exhaustive or to extend to every aspect of the Work or to involve detailed inspections of the Work beyond the responsibilities specifically assigned to Engineer in this Agreement and the Construction Contract Documents, but rather are to be limited to spot checking, selective sampling, and similar methods of general observation of the Work based on Engineer's exercise of professional judgment, as assisted by the Resident Project Representative, if any. Based on information obtained during such visits and observations, Engineer will determine in general if the Work is proceeding in accordance with the Construction Contract Documents, and Engineer shall keep Owner informed of the progress of the Work.

   b. The purpose of Engineer's visits to the Site, and representation by the Resident Project Representative, if any, at the Site, will be to enable Engineer to better carry out the duties and responsibilities assigned to and undertaken by Engineer during the Construction Phase, and, in addition, by the exercise of Engineer's efforts as an experienced and qualified design professional, to provide for Owner a greater degree of confidence that the completed Work will conform in general to the Construction Contract Documents and that Contractor has implemented and maintained the integrity of the design concept of the completed Project as a functioning whole as indicated in the Construction Contract Documents. Engineer shall not, during such visits or as a result of such observations of the Work, supervise, direct, or have control over the Work, nor shall Engineer have authority over or responsibility for the means, methods, techniques, sequences, or procedures of construction selected or used by any Constructor, for security or safety at the Site, for safety precautions and programs incident to any Constructor's work in progress, for the coordination of the Constructors' work or schedules, nor for any failure of any Constructor to comply with Laws and Regulations applicable to furnishing and performing of its work. Accordingly, Engineer neither guarantees the performance of any Constructor nor assumes responsibility for any Constructor's failure to furnish or perform the Work, or any portion of the Work, in accordance with the Construction Contract Documents.

10. *Defective Work:* Reject Work if, on the basis of Engineer's observations, Engineer believes that such Work is defective under the terms and standards set forth in the Construction Contract Documents. Provide recommendations to Owner regarding whether Contractor should correct such Work or remove and replace such Work, or whether Owner should consider accepting such Work as provided in the Construction Contract Documents.

11. *Compatibility with Design Concept:* If Engineer has express knowledge that a specific part of the Work that is not defective under the terms and standards set forth in the Construction Contract Documents is nonetheless not compatible with the design concept of the completed Project as a functioning whole, then inform Owner of such incompatibility, and provide recommendations for addressing such Work.

12. *Clarifications and Interpretations:* Accept from Contractor and Owner submittal of all matters in question concerning the requirements of the Construction Contract Documents (sometimes referred to as requests for information or interpretation—RFIs), or relating to the acceptability of the Work under the Construction Contract Documents. With reasonable promptness, render a written clarification, interpretation, or decision on the issue submitted, or initiate an amendment or supplement to the Construction Contract Documents.

Copyright © 2013 National Society of Professional Engineers, American Council of Engineering Companies, and American Society of Civil Engineers. All rights reserved.

13. *Non-reviewable Matters:* If a submitted matter in question concerns the Engineer's performance of its duties and obligations, or terms and conditions of the Construction Contract Documents that do not involve (1) the performance or acceptability of the Work under the Construction Contract Documents, (2) the design (as set forth in the Drawings, Specifications, or otherwise), or (3) other engineering or technical matters, then Engineer will promptly give written notice to Owner and Contractor that Engineer will not provide a decision or interpretation.

14. *Field Orders:* Subject to any limitations in the Construction Contract Documents, Engineer may prepare and issue Field Orders requiring minor changes in the Work.

15. *Change Orders and Work Change Directives:* Recommend Change Orders and Work Change Directives to Owner, as appropriate, and prepare Change Orders and Work Change Directives as required.

16. *Differing Site Conditions:* Respond to any notice from Contractor of differing site conditions, including conditions relating to underground facilities such as utilities, and hazardous environmental conditions. Promptly conduct reviews and prepare findings, conclusions, and recommendations for Owner's use.

17. *Shop Drawings, Samples, and Other Submittals:* Review and approve or take other appropriate action with respect to Shop Drawings, Samples, and other required Contractor submittals, but only for conformance with the information given in the Construction Contract Documents and compatibility with the design concept of the completed Project as a functioning whole as indicated by the Construction Contract Documents. Such reviews and approvals or other action will not extend to means, methods, techniques, sequences, or procedures of construction or to safety precautions and programs incident thereto. Engineer shall meet any Contractor's submittal schedule that Engineer has accepted.

18. *Substitutes and "Or-equal":* Evaluate and determine the acceptability of substitute or "or-equal" materials and equipment proposed by Contractor, but subject to the provisions of Paragraph A2.02.A.2 of this Exhibit A.

19. *Inspections and Tests:*

    a. Receive and review all certificates of inspections, tests, and approvals required by Laws and Regulations or the Construction Contract Documents. Engineer's review of such certificates will be for the purpose of determining that the results certified indicate compliance with the Construction Contract Documents and will not constitute an independent evaluation that the content or procedures of such inspections, tests, or approvals comply with the requirements of the Construction Contract Documents. Engineer shall be entitled to rely on the results of such inspections and tests.

    b. As deemed reasonably necessary, request that Contractor uncover Work that is to be inspected, tested, or approved.

    c. Pursuant to the terms of the Construction Contract, require special inspections or testing of the Work, whether or not the Work is fabricated, installed, or completed.

20. *Change Proposals and Claims:* (a) Review and respond to Change Proposals. Review each duly submitted Change Proposal from Contractor and, within 30 days after receipt of the Contractor's supporting data, either deny the Change Proposal in whole, approve it in whole, or deny it in part and approve it in part. Such actions shall be in writing, with a copy provided to Owner and Contractor. If the Change Proposal does not involve the design (as set forth in the Drawings,

Copyright © 2013 National Society of Professional Engineers, American Council of Engineering Companies, and American Society of Civil Engineers. All rights reserved.

Specifications, or otherwise), the acceptability of the Work, or other engineering or technical matters, then Engineer will notify the parties that the Engineer will not resolve the Change Proposal. (b) Provide information or data to Owner regarding engineering or technical matters pertaining to Claims.

21. *Applications for Payment:* Based on Engineer's observations as an experienced and qualified design professional and on review of Applications for Payment and accompanying supporting documentation:

    a. Determine the amounts that Engineer recommends Contractor be paid. Recommend reductions in payment (set-offs) based on the provisions for set-offs stated in the Construction Contract. Such recommendations of payment will be in writing and will constitute Engineer's representation to Owner, based on such observations and review, that, to the best of Engineer's knowledge, information and belief, Contractor's Work has progressed to the point indicated, the Work is generally in accordance with the Construction Contract Documents (subject to an evaluation of the Work as a functioning whole prior to or upon Substantial Completion, to the results of any subsequent tests called for in the Construction Contract Documents, and to any other qualifications stated in the recommendation), and the conditions precedent to Contractor's being entitled to such payment appear to have been fulfilled in so far as it is Engineer's responsibility to observe the Work. In the case of unit price Work, Engineer's recommendations of payment will include final determinations of quantities and classifications of the Work (subject to any subsequent adjustments allowed by the Construction Contract Documents).

    b. By recommending payment, Engineer shall not thereby be deemed to have represented that observations made by Engineer to check the quality or quantity of Contractor's Work as it is performed and furnished have been exhaustive, extended to every aspect of Contractor's Work in progress, or involved detailed inspections of the Work beyond the responsibilities specifically assigned to Engineer in this Agreement. Neither Engineer's review of Contractor's Work for the purposes of recommending payments nor Engineer's recommendation of any payment including final payment will impose on Engineer responsibility to supervise, direct, or control the Work, or for the means, methods, techniques, sequences, or procedures of construction or safety precautions or programs incident thereto, or Contractor's compliance with Laws and Regulations applicable to Contractor's furnishing and performing the Work. It will also not impose responsibility on Engineer to make any examination to ascertain how or for what purposes Contractor has used the money paid to Contractor by Owner; to determine that title to any portion of the Work, including materials or equipment, has passed to Owner free and clear of any liens, claims, security interests, or encumbrances; or that there may not be other matters at issue between Owner and Contractor that might affect the amount that should be paid.

22. *Contractor's Completion Documents:* Receive from Contractor, review, and transmit to Owner maintenance and operating instructions, schedules, guarantees, bonds, certificates or other evidence of insurance required by the Construction Contract Documents, certificates of inspection, tests and approvals, and Shop Drawings, Samples, and other data approved as provided under Paragraph A1.05.A.17. Receive from Contractor, review, and transmit to Owner the annotated record documents which are to be assembled by Contractor in accordance with the Construction Contract Documents to obtain final payment. The extent of Engineer's review of record documents shall be to check that Contractor has submitted all pages.

23. *Substantial Completion:* Promptly after notice from Contractor that Contractor considers the entire Work ready for its intended use, in company with Owner and Contractor, visit the Site to review the Work and determine the status of completion. Follow the procedures in the

Copyright © 2013 National Society of Professional Engineers, American Council of Engineering Companies, and American Society of Civil Engineers. All rights reserved.

Construction Contract regarding the preliminary certificate of Substantial Completion, punch list of items to be completed, Owner's objections, notice to Contractor, and issuance of a final certificate of Substantial Completion. Assist Owner regarding any remaining engineering or technical matters affecting Owner's use or occupancy of the Work following Substantial Completion.

24. *Other Tasks:* Perform or provide the following other Construction Phase tasks or deliverables: ***[N/A.]***

25. *Final Notice of Acceptability of the Work:* Conduct a final visit to the Project to determine if the Work is complete and acceptable so that Engineer may recommend, in writing, final payment to Contractor. Accompanying the recommendation for final payment, Engineer shall also provide a notice to Owner and Contractor in the form attached hereto as Exhibit E ("Notice of Acceptability of Work") that the Work is acceptable (subject to the provisions of the Notice and Paragraph A1.05.A.21.b) to the best of Engineer's knowledge, information, and belief, and based on the extent of the services provided by Engineer under this Agreement.

26. *Standards for Certain Construction-Phase Decisions:* Engineer will render decisions regarding the requirements of the Construction Contract Documents, and judge the acceptability of the Work, pursuant to the specific procedures set forth in the Construction Contract for initial interpretations, Change Proposals, and acceptance of the Work. In rendering such decisions and judgments, Engineer will not show partiality to Owner or Contractor, and will not be liable to Owner, Contractor, or others in connection with any proceedings, interpretations, decisions, or judgments conducted or rendered in good faith.

B. *Duration of Construction Phase:* The Construction Phase will commence with the execution of the first Construction Contract for the Project or any part thereof and will terminate upon written recommendation by Engineer for final payment to Contractors. If the Project involves more than one prime contract as indicated in Paragraph A1.03.D, then Construction Phase services may be rendered at different times in respect to the separate contracts. Subject to the provisions of Article 3, Engineer shall be entitled to an equitable increase in compensation if Construction Phase services (including Resident Project Representative services, if any) are required after the original date for completion and readiness for final payment of Contractor as set forth in the Construction Contract.

~~A1.06 *Post-Construction Phase*~~ **NOT APPLICABLE – The Post Construction Phase of this Project will be completed under separate agreement and is not a part of this Agreement.**

~~A. Upon written authorization from Owner during the Post-Construction Phase, Engineer shall:~~

~~1. Together with Owner, visit the Project to observe any apparent defects in the Work, make recommendations as to replacement or correction of defective Work, if any, or the need to repair of any damage to the Site or adjacent areas, and assist Owner in consultations and discussions with Contractor concerning correction of any such defective Work and any needed repairs.~~

~~2. Together with Owner, visit the Project within one month before the end of the Construction Contract's correction period to ascertain whether any portion of the Work or the repair of any damage to the Site or adjacent areas is defective and therefore subject to correction by Contractor.~~

~~3. Perform or provide the following other Post-Construction Phase tasks or deliverables: ***[N/A.]***~~

~~B. The Post-Construction Phase services may commence during the Construction Phase and, if not otherwise modified in this Exhibit A, will terminate twelve months after the commencement of the Construction Contract's correction period.~~

Copyright © 2013 National Society of Professional Engineers, American Council of Engineering Companies, and American Society of Civil Engineers. All rights reserved.

PART 2 – ADDITIONAL SERVICES

A2.01 *Additional Services Requiring Owner's Written Authorization*

C. If authorized in writing by Owner, Engineer shall provide Additional Services of the types listed below. These services are not included as part of Basic Services and will be paid for by Owner as indicated in Exhibit C.

1. Preparation of applications and supporting documents (in addition to those furnished under Basic Services) for private or governmental grants, loans, or advances in connection with the Project; preparation or review of environmental assessments and impact statements; review and evaluation of the effects on the design requirements for the Project of any such statements and documents prepared by others; and assistance in obtaining approvals of authorities having jurisdiction over the anticipated environmental impact of the Project.

2. Services to make measured drawings of existing conditions or facilities, to conduct tests or investigations of existing conditions or facilities, or to verify the accuracy of drawings or other information furnished by Owner or others.

3. Services resulting from significant changes in the scope, extent, or character of the portions of the Project designed or specified by Engineer, or the Project's design requirements, including, but not limited to, changes in size, complexity, Owner's schedule, character of construction, or method of financing; and revising previously accepted studies, reports, Drawings, Specifications, or Construction Contract Documents when such revisions are required by changes in Laws and Regulations enacted subsequent to the Effective Date or are due to any other causes beyond Engineer's control.

4. Services resulting from Owner's request to evaluate additional Study and Report Phase alternative solutions beyond those agreed to in Paragraph A1.01.A.1 and 2.

5. Services required as a result of Owner's providing incomplete or incorrect Project information to Engineer.

6. Providing renderings or models for Owner's use, including services in support of building information modeling or civil integrated management.

7. Undertaking investigations and studies including, but not limited to:

   a. detailed consideration of operations, maintenance, and overhead expenses;

   b. the preparation of feasibility studies (such as those that include projections of output capacity, utility project rates, project market demand, or project revenues) and cash flow analyses, provided that such services are based on the engineering and technical aspects of the Project, and do not include rendering advice regarding municipal financial products or the issuance of municipal securities;

   c. preparation of appraisals;

   d. evaluating processes available for licensing, and assisting Owner in obtaining process licensing;

   e. detailed quantity surveys of materials, equipment, and labor; and

Copyright © 2013 National Society of Professional Engineers, American Council of Engineering Companies, and American Society of Civil Engineers. All rights reserved.

f. audits or inventories required in connection with construction performed or furnished by Owner.

8. Furnishing services of Consultants for other than Basic Services.

9. Providing data or services of the types described in Exhibit B, when Owner retains Engineer to provide such data or services instead of Owner furnishing the same.

10. Providing the following services:

    a. Services attributable to more prime construction contracts than specified in Paragraph A1.03.D.

    b. Services to arrange for performance of construction services for Owner by contractors other than the principal prime Contractor, and administering Owner's contract for such services.

11. Services during out-of-town travel required of Engineer, other than for visits to the Site or Owner's office as required in Basic Services (Part 1 of Exhibit A).

12. Preparing for, coordinating with, participating in and responding to structured independent review processes, including, but not limited to, construction management, cost estimating, project peer review, value engineering, and constructability review requested by Owner; and performing or furnishing services required to revise studies, reports, Drawings, Specifications, or other documents as a result of such review processes.

13. Preparing additional bidding-related documents (or requests for proposals or other construction procurement documents) or Construction Contract Documents for alternate bids or cost estimates requested by Owner for the Work or a portion thereof.

14. Assistance in connection with bid protests, rebidding, or renegotiating contracts for construction, materials, equipment, or services, except when such assistance is required to complete services required by Paragraph 5.02.A and Exhibit F.

~~15. Preparing conformed Construction Contract Documents that incorporate and integrate the content of all Addenda and any amendments negotiated by Owner and Contractor.~~

16. Providing Construction Phase services beyond the original date for completion and readiness for final payment of Contractor, but only if such services increase the total quantity of services to be performed in the Construction Phase, rather than merely shifting performance of such services to a later date.

~~17. Preparing Record Drawings, and furnishing such Record Drawings to Owner.~~

~~18. Supplementing Record Drawings with information regarding the completed Project, Site, and immediately adjacent areas obtained from field observations, Owner, utility companies, and other reliable sources.~~

~~19. Conducting surveys, investigations, and field measurements to verify the accuracy of Record Drawing content obtained from Contractor, Owner, utility companies, and other sources; revise and supplement Record Drawings as needed.~~

20. Preparation of operation, maintenance, and staffing manuals.

Copyright © 2013 National Society of Professional Engineers, American Council of Engineering Companies, and American Society of Civil Engineers. All rights reserved.

~~21. Protracted or extensive assistance in refining and adjusting of Project equipment and systems (such as initial startup, testing, and balancing).~~

22. Assistance to Owner in training Owner's staff to operate and maintain Project equipment and systems.

23. Assistance to Owner in developing systems and procedures for (a) control of the operation and maintenance of Project equipment and systems, and (b) related recordkeeping.

24. Preparing to serve or serving as a consultant or witness for Owner in any litigation, arbitration, lien or bond claim, or other legal or administrative proceeding involving the Project.

~~25. Overtime work requiring higher than regular rates.~~

~~26. Providing construction surveys and staking to enable Contractor to perform its work other than as required under Paragraph A1.05.A.8; any type of property surveys or related engineering services needed for the transfer of interests in real property; and providing other special field surveys.~~

27. Providing more extensive services required to enable Engineer to issue notices or certifications requested by Owner.

28. Extensive services required during any correction period, or with respect to monitoring Contractor's compliance with warranties and guarantees called for in the Construction Contract (except as agreed to under Basic Services).

29. Other additional services performed or furnished by Engineer not otherwise provided for in this Agreement.

A2.02 ~~*Additional Services Not Requiring Owner's Written Authorization*~~

~~A. Engineer shall advise Owner that Engineer is commencing to perform or furnish the Additional Services of the types listed below. For such Additional Services, Engineer need not request or obtain specific advance written authorization from Owner. Engineer shall cease performing or furnishing such Additional Services upon receipt of written notice to cease from Owner.~~

~~1. Services in connection with Work Change Directives and Change Orders to reflect changes requested by Owner.~~

~~2. Services in making revisions to Drawings and Specifications occasioned by the acceptance of substitute materials or equipment other than "or equal" items; services after the award of the Construction Contract in evaluating and determining the acceptability of a proposed "or equal" or substitution which is found to be inappropriate for the Project; evaluation and determination of an excessive number of proposed "or equals" or substitutions, whether proposed before or after award of the Construction Contract.~~

~~3. Services resulting from significant delays, changes, or price increases occurring as a direct or indirect result of materials, equipment, or energy shortages.~~

~~4. Additional or extended services arising from (a) the presence at the Site of any Constituent of Concern or items of historical or cultural significance, (b) emergencies or acts of God endangering the Work, (c) damage to the Work by fire or other causes during construction, (d) a~~

Copyright © 2013 National Society of Professional Engineers, American Council of Engineering Companies, and American Society of Civil Engineers. All rights reserved.

~~significant amount of defective, neglected, or delayed Work, (e) acceleration of the progress schedule involving services beyond normal working hours, or (f) default by Contractor.~~

5. ~~Services (other than Basic Services during the Post-Construction Phase) in connection with any partial utilization of the Work by Owner prior to Substantial Completion.~~

6. ~~Evaluating unreasonable or frivolous requests for interpretation or information (RFIs), Change Proposals, or other demands from Contractor or others in connection with the Work, or an excessive number of RFIs, Change Proposals, or demands.~~

7. ~~Reviewing a Shop Drawing or other Contractor submittal more than three times, as a result of repeated inadequate submissions by Contractor.~~

8. ~~While at the Site, compliance by Engineer and its staff with those terms of Owner's or Contractor's safety program provided to Engineer subsequent to the Effective Date that exceed those normally required of engineering personnel by federal, State, or local safety authorities for similar construction sites.~~

Copyright © 2013 National Society of Professional Engineers, American Council of Engineering Companies, and American Society of Civil Engineers. All rights reserved.

THIS PAGE LEFT BLANK INTENTIONALLY

Copyright © 2013 National Society of Professional Engineers, American Council of Engineering Companies, and American Society of Civil Engineers. All rights reserved.

This is **EXHIBIT B**, consisting of **4** pages, referred to in and part of the **Agreement between Owner and Engineer for Professional Services** dated **February 17, 2025**.

Owner's Responsibilities

Article 2 of the Agreement is supplemented to include the following agreement of the parties.

B2.01 In addition to other responsibilities of Owner as set forth in this Agreement, Owner shall at its expense:

B. Provide Engineer with all criteria and full information as to Owner's requirements for the Project, including design objectives and constraints, space, capacity and performance requirements, flexibility, and expandability, and any budgetary limitations.

C. Give instructions to Engineer regarding Owner's procurement of construction services (including instructions regarding advertisements for bids, instructions to bidders, and requests for proposals, as applicable), Owner's construction contract practices and requirements, insurance and bonding requirements, electronic transmittals during construction, and other information necessary for the finalization of Owner's bidding-related documents (or requests for proposals or other construction procurement documents), and Construction Contract Documents. Furnish copies (or give specific directions requesting Engineer to use copies already in Engineer's possession) of all design and construction standards, Owner's standard forms, general conditions (if other than EJCDC® C-700, Standard General Conditions of the Construction Contract, 2013 Edition), supplementary conditions, text, and related documents and content for Engineer to include in the draft bidding-related documents (or requests for proposals or other construction procurement documents), and draft Construction Contract Documents, when applicable. Owner shall have responsibility for the final content of (1) such bidding-related documents (or requests for proposals or other construction procurement documents), and (2) those portions of any Construction Contract other than the design (as set forth in the Drawings, Specifications, or otherwise), and other engineering or technical matters; and Owner shall seek the advice of Owner's legal counsel, risk managers, and insurance advisors with respect to the drafting and content of such documents.

D. Furnish to Engineer any other available information pertinent to the Project including reports and data relative to previous designs, construction, or investigation at or adjacent to the Site.

E. Following Engineer's assessment of initially-available Project information and data and upon Engineer's request, obtain, furnish, or otherwise make available (if necessary through title searches, or retention of specialists or consultants) such additional Project-related information and data as is reasonably required to enable Engineer to complete its Basic and Additional Services. Such additional information or data would generally include the following:

1. Property descriptions.

2. Zoning, deed, and other land use restrictions.

3. Utility and topographic mapping and surveys.

4. Property, boundary, easement, right-of-way, and other special surveys or data, including establishing relevant reference points.

Copyright © 2013 National Society of Professional Engineers, American Council of Engineering Companies, and American Society of Civil Engineers. All rights reserved.

5. Explorations and tests of subsurface conditions at or adjacent to the Site; geotechnical reports and investigations; drawings of physical conditions relating to existing surface or subsurface structures at the Site; hydrographic surveys, laboratory tests and inspections of samples, materials, and equipment; with appropriate professional interpretation of such information or data.

6. Environmental assessments, audits, investigations, and impact statements, and other relevant environmental, historical, or cultural studies relevant to the Project, the Site, and adjacent areas.

7. Data or consultations as required for the Project but not otherwise identified in this Agreement.

F. Arrange for safe access to and make all provisions for Engineer to enter upon public and private property as required for Engineer to perform services under the Agreement.

G. Recognizing and acknowledging that Engineer's services and expertise do not include the following services, provide, as required for the Project:

1. Accounting, bond and financial advisory (including, if applicable, "municipal advisor" services as described in Section 975 of the Dodd-Frank Wall Street Reform and Consumer Protection Act (2010) and the municipal advisor registration rules issued by the Securities and Exchange Commission), independent cost estimating, and insurance counseling services.

2. Legal services with regard to issues pertaining to the Project as Owner requires, Contractor raises, or Engineer reasonably requests.

3. Such auditing services as Owner requires to ascertain how or for what purpose Contractor has used the money paid.

H. Provide the services of an independent testing laboratory to perform all inspections, tests, and approvals of samples, materials, and equipment required by the Construction Contract Documents (other than those required to be furnished or arranged by Contractor), or to evaluate the performance of materials, equipment, and facilities of Owner, prior to their incorporation into the Work with appropriate professional interpretation thereof. Provide Engineer with the findings and reports generated by testing laboratories, including findings and reports obtained from or through Contractor.

I. Provide reviews, approvals, and permits from all governmental authorities having jurisdiction to approve all phases of the Project designed or specified by Engineer and such reviews, approvals, and consents from others as may be necessary for completion of each phase of the Project.

J. Advise Engineer of the identity and scope of services of any independent consultants employed by Owner to perform or furnish services in regard to the Project, including, but not limited to, cost estimating, project peer review, value engineering, and constructability review.

K. If Owner designates a construction manager or an individual or entity other than, or in addition to, Engineer to represent Owner at the Site, define and set forth as an attachment to this Exhibit B the duties, responsibilities, and limitations of authority of such other party and the relation thereof to the duties, responsibilities, and authority of Engineer.

L. If more than one prime contract is to be awarded for the Work designed or specified by Engineer, then designate a person or entity to have authority and responsibility for coordinating the activities among the various prime Contractors, and define and set forth the duties, responsibilities, and limitations of authority of such individual or entity and the relation thereof to the duties,

Copyright © 2013 National Society of Professional Engineers, American Council of Engineering Companies, and American Society of Civil Engineers. All rights reserved.

responsibilities, and authority of Engineer as an attachment to this Exhibit B that is to be mutually agreed upon and made a part of this Agreement before such services begin.

M. Inform Engineer in writing of any specific requirements of safety or security programs that are applicable to Engineer, as a visitor to the Site.

N. Examine all alternative solutions, studies, reports, sketches, Drawings, Specifications, proposals, and other documents presented by Engineer (including obtaining advice of an attorney, risk manager, insurance counselor, financial/municipal advisor, and other advisors or consultants as Owner deems appropriate with respect to such examination) and render in writing timely decisions pertaining thereto.

O. Inform Engineer regarding any need for assistance in evaluating the possible use of Project Strategies, Technologies, and Techniques, as defined in Exhibit A.

P. Advise Engineer as to whether Engineer's assistance is requested in identifying opportunities for enhancing the sustainability of the Project.

~~Q. Place and pay for advertisement for Bids in appropriate publications.~~

R. Furnish to Engineer data as to Owner's anticipated costs for services to be provided by others (including, but not limited to, accounting, bond and financial, independent cost estimating, insurance counseling, and legal advice) for Owner so that Engineer may assist Owner in collating the various cost categories which comprise Total Project Costs.

~~S. Attend and participate in the pre-bid conference, bid opening, pre-construction conferences, construction progress and other job-related meetings, and Site visits to determine Substantial Completion and readiness of the completed Work for final payment.~~

T. Authorize Engineer to provide Additional Services as set forth in Part 2 of Exhibit A of the Agreement, as required.

U. Perform or provide the following: ***[N/A.]***

Copyright © 2013 National Society of Professional Engineers, American Council of Engineering Companies, and American Society of Civil Engineers. All rights reserved.

THIS PAGE LEFT BLANK INTENTIONALLY

Copyright © 2013 National Society of Professional Engineers, American Council of Engineering Companies, and American Society of Civil Engineers. All rights reserved.

This is **EXHIBIT C**, consisting of **8** pages, referred to in and part of the **Agreement between Owner and Engineer for Professional Services** dated **February 17, 2025**

Payments to Engineer for Services and Reimbursable Expenses
COMPENSATION PACKET BC-2: Basic Services – Standard Hourly Rates

Article 2 of the Agreement is supplemented to include the following agreement of the parties:

ARTICLE 2 – OWNER'S RESPONSIBILITIES

C2.01 *Compensation For Basic Services (other than Resident Project Representative) – Standard Hourly Rates Method of Payment*

A. Owner shall pay Engineer for Basic Services set forth in Exhibit A, except for services of Engineer's Resident Project Representative, if any, as follows:

1. An amount equal to the cumulative hours charged to the Project by each class of Engineer's personnel times Standard Hourly Rates for each applicable billing class for all services performed on the Project, plus Reimbursable Expenses and Engineer's Consultants' charges, if any.

2. The Standard Hourly Rates charged by Engineer constitute full and complete compensation for Engineer's services, including labor costs, overhead, and profit; the Standard Hourly Rates do not include Reimbursable Expenses or Engineer's Consultants' charges.

3. Engineer's Reimbursable Expenses Schedule and Standard Hourly Rates are attached to this Exhibit C as Appendices 1 and 2.

4. The total compensation for services under Paragraph C2.01 is estimated to be **$33,000** based on the following estimated distribution of compensation:

a.	Study and Report Phase	$ N/A
b.	Preliminary Design Phase	**$ 6,000.00**
c.	Final Design Phase	**$ 4,500.00**
d.	Bidding or Negotiating Phase	**$ 4,500.00**
e.	Construction Phase	**$ 18,000.00**
~~f.~~	~~Post-Construction Phase~~	~~$[ ]~~

5. Engineer may alter the distribution of compensation between individual phases of the work noted herein to be consistent with services actually rendered, but shall not exceed the total estimated compensation amount unless approved in writing by Owner. See also C2.03.C.2 below.

Copyright © 2013 National Society of Professional Engineers, American Council of Engineering Companies, and American Society of Civil Engineers. All rights reserved.

6. The total estimated compensation for Engineer's services included in the breakdown by phases as noted in Paragraph C2.01.A.3 incorporates all labor, overhead, profit, Reimbursable Expenses, and Engineer's Consultants' charges.

7. The amounts billed for Engineer's services under Paragraph C2.01 will be based on the cumulative hours charged to the Project during the billing period by each class of Engineer's employees times Standard Hourly Rates for each applicable billing class, plus Reimbursable Expenses and Engineer's Consultants' charges.

8. The Standard Hourly Rates and Reimbursable Expenses Schedule will be adjusted annually (as of **January 2**) to reflect equitable changes in the compensation payable to Engineer.

C2.02 *Compensation For Reimbursable Expenses*

A. Owner shall pay Engineer for all Reimbursable Expenses at the rates set forth in Appendix 1 to this Exhibit C.

~~B. Reimbursable Expenses include the expenses identified in Appendix 1 and the following: transportation (including mileage), lodging, and subsistence incidental thereto; providing and maintaining field office facilities including furnishings and utilities; toll telephone calls, mobile phone charges, and courier charges; reproduction of reports, Drawings, Specifications, bidding-related or other procurement documents, Construction Contract Documents, and similar Project-related items; and Consultants' charges. In addition, if authorized in advance by Owner, Reimbursable Expenses will also include expenses incurred for the use of highly specialized equipment.~~

C. The amounts payable to Engineer for Reimbursable Expenses will be the Project-related internal expenses actually incurred or allocated by Engineer, plus all invoiced external Reimbursable Expenses allocable to the Project, the latter multiplied by a factor of **1.1.**

C2.03 *Other Provisions Concerning Payment*

A. Whenever Engineer is entitled to compensation for the charges of Engineer's Consultants, those charges shall be the amounts billed by Engineer's Consultants to Engineer times a factor of **1.1**.

B. *Factors:* The external Reimbursable Expenses and Engineer's Consultants' factors include Engineer's overhead and profit associated with Engineer's responsibility for the administration of such services and costs.

C. *Estimated Compensation Amounts:*

1. Engineer's estimate of the amounts that will become payable for specified services are only estimates for planning purposes, are not binding on the parties, and are not the minimum or maximum amounts payable to Engineer under the Agreement.

2. When estimated compensation amounts have been stated herein and it subsequently becomes apparent to Engineer that the total compensation amount thus estimated will be exceeded, Engineer shall give Owner written notice thereof, allowing Owner to consider its options, including suspension or termination of Engineer's services for Owner's convenience. Upon notice, Owner and Engineer promptly shall review the matter of services remaining to be performed and compensation for such services. Owner shall either exercise its right to suspend or terminate Engineer's services for Owner's convenience,

Copyright © 2013 National Society of Professional Engineers, American Council of Engineering Companies, and American Society of Civil Engineers. All rights reserved.

agree to such compensation exceeding said estimated amount, or agree to a reduction in the remaining services to be rendered by Engineer, so that total compensation for such services will not exceed said estimated amount when such services are completed. If Owner decides not to suspend the Engineer's services during the negotiations and Engineer exceeds the estimated amount before Owner and Engineer have agreed to an increase in the compensation due Engineer or a reduction in the remaining services, then Engineer shall be paid for all services rendered hereunder.

D. To the extent necessary to verify Engineer's charges and upon Owner's timely request, Engineer shall make copies of such records available to Owner at cost.

Copyright © 2013 National Society of Professional Engineers, American Council of Engineering Companies, and American Society of Civil Engineers. All rights reserved.

THIS PAGE LEFT BLANK INTENTIONALLY

Copyright © 2013 National Society of Professional Engineers, American Council of Engineering Companies, and American Society of Civil Engineers. All rights reserved.

COMPENSATION PACKET RPR-2:
Resident Project Representative – Standard Hourly Rates

Article 2 of the Agreement is supplemented to include the following agreement of the parties:

C2.04 *Compensation for Resident Project Representative Basic Services – Standard Hourly Rates Method of Payment*

E. *Owner shall pay Engineer for Resident Project Representative Basic Services as follows:*

1. *Resident Project Representative Services:* For services of Engineer's Resident Project Representative under Paragraph A1.05.A of Exhibit A, an amount equal to the cumulative hours charged to the Project by each class of Engineer's personnel times Standard Hourly Rates for each applicable billing class for all Resident Project Representative services performed on the Project, plus related Reimbursable Expenses and Engineer's Consultant's charges, if any. The total compensation under this paragraph is **included in C.2.01.A.4.** based upon ~~full-time~~ **intermittent** RPR services on an ~~eight~~ **6**-hour workday, Monday through Friday, over **8-days of a 20-day** construction schedule.

F. *Compensation for Reimbursable Expenses:*

1. For those Reimbursable Expenses that are not accounted for in the compensation for Basic Services under Paragraph C2.01, and are directly related to the provision of Resident Project Representative or Post-Construction Basic Services, Owner shall pay Engineer at the rates set forth in Appendix 1 to this Exhibit C.

2. Reimbursable Expenses include the expenses identified in Appendix 1 and the following: transportation (including mileage), lodging, and subsistence incidental thereto; providing and maintaining field office facilities including furnishings and utilities; subsistence and transportation of Resident Project Representative and assistants; toll telephone calls, mobile phone charges, and courier charges; reproduction of reports, Drawings, Specifications, bidding-related or other procurement documents, Construction Contract Documents, and similar Project-related items. In addition, if authorized in advance by Owner, Reimbursable Expenses will also include expenses incurred for the use of highly specialized equipment.

3. The amounts payable to Engineer for Reimbursable Expenses, if any, will be those internal expenses related to the Resident Project Representative Basic Services that are actually incurred or allocated by Engineer, plus all invoiced external Reimbursable Expenses allocable to such services, the latter multiplied by a factor of [**1**].

4. The Reimbursable Expenses Schedule will be adjusted annually (as of **January 2**) to reflect equitable changes in the compensation payable to Engineer.

G. *Other Provisions Concerning Payment Under this Paragraph C2.04:*

1. Whenever Engineer is entitled to compensation for the charges of Engineer's Consultants, those charges shall be the amounts billed by Engineer's Consultants to Engineer times a factor of **1.1**.

Copyright © 2013 National Society of Professional Engineers, American Council of Engineering Companies, and American Society of Civil Engineers. All rights reserved.

2. *Factors*: The external Reimbursable Expenses and Engineer's Consultant's factors include Engineer's overhead and profit associated with Engineer's responsibility for the administration of such services and costs.

3. *Estimated Compensation Amounts*:

   a. Engineer's estimate of the amounts that will become payable for specified services are only estimates for planning purposes, are not binding on the parties, and are not the minimum or maximum amounts payable to Engineer under the Agreement.

   b. When estimated compensation amounts have been stated herein and it subsequently becomes apparent to Engineer that the total compensation amount thus estimated will be exceeded, Engineer shall give Owner written notice thereof, allowing Owner to consider its options, including suspension or termination of Engineer's services for Owner's convenience. Upon notice Owner and Engineer promptly shall review the matter of services remaining to be performed and compensation for such services. Owner shall either exercise its right to suspend or terminate Engineer's services for Owner's convenience, agree to such compensation exceeding said estimated amount, or agree to a reduction in the remaining services to be rendered by Engineer, so that total compensation for such services will not exceed said estimated amount when such services are completed. If Owner decides not to suspend Engineer's services during negotiations and Engineer exceeds the estimated amount before Owner and Engineer have agreed to an increase in the compensation due Engineer or a reduction in the remaining services, then Engineer shall be paid for all services rendered hereunder.

4. To the extent necessary to verify Engineer's charges and upon Owner's timely request, Engineer shall make copies of such records available to Owner at cost.

Copyright © 2013 National Society of Professional Engineers, American Council of Engineering Companies, and American Society of Civil Engineers. All rights reserved.

Article 2 of the Agreement is supplemented to include the following agreement of the parties:

C2.05 Compensation for Additional Services – Standard Hourly Rates Method of Payment

A. Owner shall pay Engineer for Additional Services, if any, as follows:

1. *General*: For services of Engineer's personnel engaged directly on the Project pursuant to Paragraph A2.01 or A2.02 of Exhibit A, except for services as a consultant or witness under Paragraph A2.01.A.20, (which if needed shall be separately negotiated based on the nature of the required consultation or testimony) an amount equal to the cumulative hours charged to the Project by each class of Engineer's personnel times Standard Hourly Rates for each applicable billing class for all Additional Services performed on the Project, plus related Reimbursable Expenses and Engineer's Consultant's charges, if any.

B. *Compensation For Reimbursable Expenses:*

1. For those Reimbursable Expenses that are not accounted for in the compensation for Basic Services under Paragraph C2.01 and are directly related to the provision of Additional Services, Owner shall pay Engineer at the rates set forth in Appendix 1 to this Exhibit C.

2. Reimbursable Expenses include the expenses identified in Appendix 1 and the following categories: transportation (including mileage), lodging, and subsistence incidental thereto; providing and maintaining field office facilities including furnishings and utilities; toll telephone calls, mobile phone charges, and courier charges; reproduction of reports, Drawings, Specifications, bidding-related or other procurement documents, Construction Contract Documents, and similar Project-related items; and Consultants' charges. In addition, if authorized in advance by Owner, Reimbursable Expenses will also include expenses incurred for the use of highly specialized equipment.

3. The amounts payable to Engineer for Reimbursable Expenses, if any, will be the Additional Services-related internal expenses actually incurred or allocated by Engineer, plus all invoiced external Reimbursable Expenses allocable to such Additional Services, the latter multiplied by a factor of [**1**].

C. The Reimbursable Expenses Schedule will be adjusted annually (as of **January 2**) to reflect equitable changes in the compensation payable to Engineer.

D. *Other Provisions Concerning Payment for Additional Services:*

1. Whenever Engineer is entitled to compensation for the charges of Engineer's Consultants, those charges shall be the amounts billed by Engineer's Consultants to Engineer times a factor of [**1.1**].

2. *Factors:* The external Reimbursable Expenses and Engineer's Consultant's Factors include Engineer's overhead and profit associated with Engineer's responsibility for the administration of such services and costs.

Copyright © 2013 National Society of Professional Engineers, American Council of Engineering Companies, and American Society of Civil Engineers. All rights reserved.

3. To the extent necessary to verify Engineer's charges and upon Owner's timely request, Engineer shall make copies of such records available to Owner at cost.

Copyright © 2013 National Society of Professional Engineers, American Council of Engineering Companies, and American Society of Civil Engineers. All rights reserved.

This is **Appendix 1 to EXHIBIT C**, consisting of **2** pages, referred to in and part of the **Agreement between Owner and Engineer for Professional Services** dated **February 17, 2025**.

Reimbursable Expenses Schedule

Reimbursable Expenses are subject to review and adjustment per Exhibit C. Rates and charges for Reimbursable Expenses as of the date of the Agreement are:

A.1. REIMBURSABLE EXPENSES

A.1.1. Vehicle miles shall be charged at the rate of $0.58 per regular vehicle.

A.1.2 Meals and lodging shall be charged at costs incurred by the ENGINEER.

A.1.3. The cost of independent consulting and testing services (including, but not limited to, soils engineering and testing services) shall be charged at the cost incurred by the ENGINEER plus an assumed risk fee of 10% of the incurred cost.

A.2. MODIFICATIONS

A.2.1. Hourly rates and charges as set forth herein shall be adjusted on January 2 of each calendar year, as applicable.

Copyright © 2013 National Society of Professional Engineers, American Council of Engineering Companies, and American Society of Civil Engineers. All rights reserved.

THIS PAGE LEFT BLANK INTENTIONALLY

Copyright © 2013 National Society of Professional Engineers, American Council of Engineering Companies, and American Society of Civil Engineers. All rights reserved.

This is **EXHIBIT D**, consisting of **6** pages, referred to in and part of the Agreement between Owner and Engineer for Professional Services dated **February 17, 2025**.

Duties, Responsibilities, and Limitations of Authority of Resident Project Representative

Article 1 of the Agreement is supplemented to include the following agreement of the parties:

ARTICLE 1 - SERVICES OF ENGINEER

D1.01 *Resident Project Representative*

A. Engineer shall furnish a Resident Project Representative ("RPR") to assist Engineer in observing progress and quality of the Work. The RPR may provide full time representation or may provide representation to a lesser degree. RPR is Engineer's representative at the Site, will act as directed by and under the supervision of Engineer, and will confer with Engineer regarding RPR's actions.

B. Through RPR's observations of the Work, including field checks of materials and installed equipment, Engineer shall endeavor to provide further protection for Owner against defects and deficiencies in the Work. However, Engineer shall not, as a result of such RPR observations of the Work, supervise, direct, or have control over the Work, nor shall Engineer (including the RPR) have authority over or responsibility for the means, methods, techniques, sequences, or procedures of construction selected or used by any Constructor, for security or safety at the Site, for safety precautions and programs incident to the Work or any Constructor's work in progress, for the coordination of the Constructors' work or schedules, or for any failure of any Constructor to comply with Laws and Regulations applicable to the performing and furnishing of its work. The Engineer (including RPR) neither guarantees the performances of any Constructor nor assumes responsibility for any Constructor's failure to furnish and perform the Work, or any portion of the Work, in accordance with the Construction Contract Documents. In addition, the specific terms set forth in Exhibit A, Paragraph A1.05, of this Agreement are applicable.

C. The duties and responsibilities of the RPR are as follows:

1. *General:* RPR's dealings in matters pertaining to the Work in general shall be with Engineer and Contractor. RPR's dealings with Subcontractors shall only be through or with the full knowledge and approval of Contractor. RPR shall generally communicate with Owner only with the knowledge of and under the direction of Engineer.

2. *Schedules:* Review the progress schedule, schedule of Shop Drawing and Sample submittals, schedule of values, and other schedules prepared by Contractor and consult with Engineer concerning acceptability of such schedules.

3. *Conferences and Meetings:* Attend meetings with Contractor, such as preconstruction conferences, progress meetings, job conferences, and other Project-related meetings (but not including Contractor's safety meetings), and as appropriate prepare and circulate copies of minutes thereof.

Copyright © 2013 National Society of Professional Engineers, American Council of Engineering Companies, and American Society of Civil Engineers. All rights reserved.

4. *Safety Compliance:* Comply with Site safety programs, as they apply to RPR, and if required to do so by such safety programs, receive safety training specifically related to RPR's own personal safety while at the Site.

5. *Liaison:*

   a. Serve as Engineer's liaison with Contractor. Working principally through Contractor's authorized representative or designee, assist in providing information regarding the provisions and intent of the Construction Contract Documents.

   b. Assist Engineer in serving as Owner's liaison with Contractor when Contractor's operations affect Owner's on-Site operations.

   c. Assist in obtaining from Owner additional details or information, when required for proper execution of the Work.

6. *Clarifications and Interpretations:* Receive from Contractor submittal of any matters in question concerning the requirements of the Construction Contract Documents (sometimes referred to as requests for information or interpretation—RFIs), or relating to the acceptability of the Work under the Construction Contract Documents. Report to Engineer regarding such RFIs. Report to Engineer when clarifications and interpretations of the Construction Contract Documents are needed, whether as the result of a Contractor RFI or otherwise. Transmit Engineer's clarifications, interpretations, and decisions to Contractor. ,

7. *Shop Drawings and Samples:*

   a. Record date of receipt of Samples and Contractor-approved Shop Drawings.

   b. Receive Samples that are furnished at the Site by Contractor, and notify Engineer of availability of Samples for examination.

   c. Advise Engineer and Contractor of the commencement of any portion of the Work requiring a Shop Drawing or Sample submittal, if RPR believes that the submittal has not been received from Contractor, or has not been approved by Contractor or Engineer.

8. *Proposed* M*odifications:* Consider and evaluate Contractor's suggestions for modifications to the Drawings or Specifications, and report such suggestions, together with RPR's recommendations, if any, to Engineer. Transmit Engineer's response (if any) to such suggestions to Contractor.

9. *Review of Work; Defective Work:*

   a. Report to Engineer whenever RPR believes that any part of the Work is defective under the terms and standards set forth in the Construction Contract Documents, and provide recommendations as to whether such Work should be corrected, removed and replaced, or accepted as provided in the Construction Contract Documents.

   b. Inform Engineer of any Work that RPR believes is not defective under the terms and standards set forth in the Construction Contract Documents, but is nonetheless not compatible with the design concept of the completed Project as a functioning whole, and provide recommendations to Engineer for addressing such Work. ; and

Copyright © 2013 National Society of Professional Engineers, American Council of Engineering Companies, and American Society of Civil Engineers. All rights reserved.

c. Advise Engineer of that part of the Work that RPR believes should be uncovered for observation, or requires special testing, inspection, or approval.

10. *Inspections, Tests, and System Start-ups:*

a. Consult with Engineer in advance of scheduled inspections, tests, and systems start-ups.

b. Verify that tests, equipment, and systems start-ups and operating and maintenance training are conducted in the presence of appropriate Owner's personnel, and that Contractor maintains adequate records thereof.

c. Observe, record, and report to Engineer appropriate details relative to the test procedures and systems start-ups.

d. Observe whether Contractor has arranged for inspections required by Laws and Regulations, including but not limited to those to be performed by public or other agencies having jurisdiction over the Work.

e. Accompany visiting inspectors representing public or other agencies having jurisdiction over the Work, record the results of these inspections, and report to Engineer.

11. *Records*:

a. Maintain at the Site orderly files for correspondence, reports of job conferences, copies of Construction Contract Documents including all Change Orders, Field Orders, Work Change Directives, Addenda, additional Drawings issued subsequent to the execution of the Construction Contract, RFIs, Engineer's clarifications and interpretations of the Construction Contract Documents, progress reports, approved Shop Drawing and Sample submittals, and other Project-related documents.

b. Prepare a daily report or keep a diary or log book, recording Contractor's hours on the Site, Subcontractors present at the Site, weather conditions, data relative to questions of Change Orders, Field Orders, Work Change Directives, or changed conditions, Site visitors, deliveries of equipment or materials, daily activities, decisions, observations in general, and specific observations in more detail as in the case of observing test procedures; and send copies to Engineer.

c. Upon request from Owner to Engineer, photograph or video Work in progress or Site conditions.

d. Record and maintain accurate, up-to-date lists of the names, addresses, fax numbers, e-mail addresses, websites, and telephone numbers (including mobile numbers) of all Contractors, Subcontractors, and major Suppliers of materials and equipment.

e. Maintain records for use in preparing Project documentation.

f. Upon completion of the Work, furnish original set of all RPR Project documentation to Engineer.

Copyright © 2013 National Society of Professional Engineers, American Council of Engineering Companies, and American Society of Civil Engineers. All rights reserved.

1. *Reports:*

   a. Furnish to Engineer periodic reports as required of progress of the Work and of Contractor's compliance with the progress schedule and schedule of Shop Drawing and Sample submittals.

   ~~b. Draft and recommend to Engineer proposed Change Orders, Work Change Directives, and Field Orders. Obtain backup material from Contractor.~~

   c. Furnish to Engineer and Owner copies of all inspection, test, and system start-up reports.

   d. Immediately inform Engineer of the occurrence of any Site accidents, emergencies, acts of God endangering the Work, possible force majeure or delay events, damage to property by fire or other causes, or the discovery of any potential differing site condition or Constituent of Concern.

2. *Payment Requests:* Review applications for payment with Contractor for compliance with the established procedure for their submission and forward with recommendations to Engineer, noting particularly the relationship of the payment requested to the schedule of values, Work completed, and materials and equipment delivered at the Site but not incorporated in the Work.

3. *Certificates, Operation and Maintenance Manuals:* During the course of the Work, verify that materials and equipment certificates, operation and maintenance manuals and other data required by the Contract Documents to be assembled and furnished by Contractor are applicable to the items actually installed and in accordance with the Contract Documents, and have these documents delivered to Engineer for review and forwarding to Owner prior to payment for that part of the Work.

4. *Completion*:

   a. Participate in Engineer's visits to the Site regarding Substantial Completion, assist in the determination of Substantial Completion, and prior to the issuance of a Certificate of Substantial Completion submit a punch list of observed items requiring completion or correction.

   b. Participate in Engineer's visit to the Site in the company of Owner and Contractor, to determine completion of the Work, and prepare a final punch list of items to be completed or corrected by Contractor.

   c. Observe whether all items on the final punch list have been completed or corrected, and make recommendations to Engineer concerning acceptance and issuance of the Notice of Acceptability of the Work (Exhibit E).

D. Resident Project Representative shall not:

1. Authorize any deviation from the Construction Contract Documents or substitution of materials or equipment (including "or-equal" items).

2. Exceed limitations of Engineer's authority as set forth in this Agreement.

Copyright © 2013 National Society of Professional Engineers, American Council of Engineering Companies, and American Society of Civil Engineers. All rights reserved.

3. Undertake any of the responsibilities of Contractor, Subcontractors, or Suppliers, or any Constructor.

4. Advise on, issue directions relative to, or assume control over any aspect of the means, methods, techniques, sequences or procedures of the Work, by Contractor or any other Constructor.

5. Advise on, issue directions regarding, or assume control over security or safety practices, precautions, and programs in connection with the activities or operations of Owner or Contractor.

6. Participate in specialized field or laboratory tests or inspections conducted off-site by others except as specifically authorized by Engineer.

7. Accept Shop Drawing or Sample submittals from anyone other than Contractor.

8. Authorize Owner to occupy the Project in whole or in part.

Copyright © 2013 National Society of Professional Engineers, American Council of Engineering Companies, and American Society of Civil Engineers. All rights reserved.

THIS PAGE LEFT BLANK INTENTIONALLY

Copyright © 2013 National Society of Professional Engineers, American Council of Engineering Companies, and American Society of Civil Engineers. All rights reserved.

This is **EXHIBIT E**, consisting of **2** pages, referred to in and part of the Agreement between Owner and Engineer for Professional Services dated **February 17, 2025**.

NOTICE OF ACCEPTABILITY OF WORK

PROJECT:

OWNER:

CONTRACTOR:

OWNER'S CONSTRUCTION CONTRACT IDENTIFICATION:

EFFECTIVE DATE OF THE CONSTRUCTION CONTRACT:

ENGINEER:

NOTICE DATE:

To: _____
Owner

And To: _____
Contractor

From: _____
Engineer

The Engineer hereby gives notice to the above Owner and Contractor that Engineer has recommended final payment of Contractor, and that the Work furnished and performed by Contractor under the above Construction Contract is acceptable, expressly subject to the provisions of the related Contract Documents, the Agreement between Owner and Engineer for Professional Services dated _____, and the following terms and conditions of this Notice:

CONDITIONS OF NOTICE OF ACCEPTABILITY OF WORK

The Notice of Acceptability of Work ("Notice") is expressly made subject to the following terms and conditions to which all those who receive said Notice and rely thereon agree:

1. This Notice is given with the skill and care ordinarily used by members of the engineering profession practicing under similar conditions at the same time and in the same locality.

2. This Notice reflects and is an expression of the Engineer's professional opinion.

Copyright © 2013 National Society of Professional Engineers, American Council of Engineering Companies, and American Society of Civil Engineers. All rights reserved.

3. This Notice is given as to the best of Engineer's knowledge, information, and belief as of the Notice Date.

4. This Notice is based entirely on and expressly limited by the scope of services Engineer has been employed by Owner to perform or furnish during construction of the Project (including observation of the Contractor's work) under Engineer's Agreement with Owner, and applies only to facts that are within Engineer's knowledge or could reasonably have been ascertained by Engineer as a result of carrying out the responsibilities specifically assigned to Engineer under such Agreement.

5. This Notice is not a guarantee or warranty of Contractor's performance under the Construction Contract, an acceptance of Work that is not in accordance with the related Contract Documents, including but not limited to defective Work discovered after final inspection, nor an assumption of responsibility for any failure of Contractor to furnish and perform the Work thereunder in accordance with the Construction Contract Documents, or to otherwise comply with the Construction Contract Documents or the terms of any special guarantees specified therein.

6. This Notice does not relieve Contractor of any surviving obligations under the Construction Contract, and is subject to Owner's reservations of rights with respect to completion and final payment.

By: _____

Title: _____

Dated: _____

Copyright © 2013 National Society of Professional Engineers, American Council of Engineering Companies, and American Society of Civil Engineers. All rights reserved.

This is **EXHIBIT G**, consisting of **2** pages, referred to in and part of the **Agreement between Owner and Engineer for Professional Services** dated **February 17, 2025**.

Insurance

Paragraph 6.04 of the Agreement is supplemented to include the following agreement of the parties.

G6.04 *Insurance*

A. The limits of liability for the insurance required by Paragraph 6.04.A and 6.04.B of the Agreement are as follows:

1. By Engineer:

a. Workers' Compensation: Statutory

b. Employer's Liability --

1) Each Accident: **$1,000,000**
2) Disease, Policy Limit: **$1,000,000**
3) Disease, Each Employee: **$1,000,000**

c. General Liability --

1) Each Occurrence (Bodily Injury and Property Damage): **$1,000,000**
2) General Aggregate: **$2,000,000**

d. Excess or Umbrella Liability --

1) Each Occurrence: **$5,000,000**
2) General Aggregate: **$5,000,000**

e. Automobile Liability --Combined Single Limit (Bodily Injury and Property Damage):

Each Accident **$1,000,000**

f. Professional Liability

1) Each Claim Made **$2,000,000**
2) Annual Aggregate **$2,000,000**

g. Other (specify): **$N/A**

Copyright © 2013 National Society of Professional Engineers, American Council of Engineering Companies, and American Society of Civil Engineers. All rights reserved.

2. By Owner:

a. Workers' Compensation: Statutory

b. Employer's Liability --

1) Each Accident: $
2) Disease, Policy Limit: $
3) Disease, Each Employee: $

c. General Liability --

1) Each Occurrence (Bodily Injury and Property Damage): $
2) General Aggregate: $

d. Excess or Umbrella Liability --

1) Each Occurrence: $
2) General Aggregate: $

e. Automobile Liability --Combined Single Limit (Bodily Injury and Property Damage):

Each Accident $

f. Other (specify): $N/A

~~B. *Additional Insureds:*~~

~~1. The following individuals or entities are to be listed on Owner's general liability policies of insurance as additional insureds:~~

~~a.~~ _____
~~Engineer~~

~~b.~~ _____
~~Engineer's Consultant~~

~~c.~~ _____
~~Engineer's Consultant~~
~~d.~~ _____
~~[other]~~

~~2. During the term of this Agreement the Engineer shall notify Owner of any other Consultant to be listed as an additional insured on Owner's general liability policies of insurance.~~

~~The Owner shall be listed on Engineer's general liability policy as provided in Paragraph 6.05.A.~~

Copyright © 2013 National Society of Professional Engineers, American Council of Engineering Companies, and American Society of Civil Engineers. All rights reserved.

This is **EXHIBIT I**, consisting of **2** pages, referred to in and part of the **Agreement between Owner and Engineer for Professional Services** dated **February 17, 2025**.

Limitations of Liability

Paragraph 6.11 of the Agreement is supplemented to include the following agreement of the parties:

A. *Limitation of Engineer's Liability*

1. *Engineer's Liability Limited to Amount of Insurance Proceeds:* Engineer shall procure and maintain insurance as required by and set forth in Exhibit G to this Agreement. Notwithstanding any other provision of this Agreement, and to the fullest extent permitted by law, the total liability, in the aggregate, of Engineer and Engineer's officers, directors, members, partners, agents, employees, and Consultants to Owner and anyone claiming by, through, or under Owner for any and all claims, losses, costs, or damages whatsoever arising out of, resulting from, or in any way related to the Project or the Agreement from any cause or causes, including but not limited to the negligence, professional errors or omissions, strict liability, breach of contract, indemnity obligations, or warranty express or implied, of Engineer or Engineer's officers, directors, members, partners, agents, employees, or Consultants (hereafter "Owner's Claims"), shall not exceed the total insurance proceeds paid on behalf of or to Engineer by Engineer's insurers in settlement or satisfaction of Owner's Claims under the terms and conditions of Engineer's insurance policies applicable thereto (excluding fees, costs and expenses of investigation, claims adjustment, defense, and appeal).

2. *Exclusion of Special, Incidental, Indirect, and Consequential Damages:* To the fullest extent permitted by law, and notwithstanding any other provision in the Agreement, consistent with the terms of Paragraph 6.10. the Engineer and Engineer's officers, directors, members, partners, agents, Consultants, and employees shall not be liable to Owner or anyone claiming by, through, or under Owner for any special, incidental, indirect, or consequential damages whatsoever arising out of, resulting from, or in any way related to the Project or the Agreement from any cause or causes, including but not limited to any such damages caused by the negligence, professional errors or omissions, strict liability, breach of contract, indemnity obligations, or warranty express or implied of Engineer or Engineer's officers, directors, members, partners, agents, employees, or Consultants, and including but not limited to:

B. *Indemnification by Owner*: To the fullest extent permitted by law, Owner shall indemnify and hold harmless Engineer and its officers, directors, members, partners, agents, employees, and Consultants from and against any and all claims, costs, losses, and damages (including but not limited to all fees and charges of engineers, architects, attorneys, and other professionals, and all court, arbitration, or other dispute resolution costs) arising out of or relating to the Project, provided that any such claim, cost, loss, or damage is attributable to bodily injury, sickness, disease, or death or to injury to or destruction of tangible property (other than the Work itself), including the loss of use resulting therefrom, but only to the extent caused by any negligent act or omission of Owner or Owner's officers, directors, members, partners, agents, employees, consultants, or others retained by or under contract to the Owner with respect to this Agreement or to the Project.

Copyright © 2013 National Society of Professional Engineers, American Council of Engineering Companies, and American Society of Civil Engineers. All rights reserved.

THIS PAGE LEFT BLANK INTENTIONALLY

Copyright © 2013 National Society of Professional Engineers, American Council of Engineering Companies, and American Society of Civil Engineers. All rights reserved.

This is **EXHIBIT K**, consisting of **2** pages, referred to in and part of the **Agreement between Owner and Engineer for Professional Services** dated **February 17, 2025**.

AMENDMENT TO OWNER-ENGINEER AGREEMENT
Amendment No. _____

The Effective Date of this Amendment is: _____.

Background Data

Effective Date of Owner-Engineer Agreement:

Owner:

Engineer:

Project:

Nature of Amendment: [Check those that are applicable and delete those that are inapplicable.]

____ Additional Services to be performed by Engineer

____ Modifications to services of Engineer

____ Modifications to responsibilities of Owner

____ Modifications of payment to Engineer

____ Modifications to time(s) for rendering services

____ Modifications to other terms and conditions of the Agreement

Description of Modifications:

Here describe the modifications, in as much specificity and detail as needed. Use an attachment if necessary.

Agreement Summary:

Original agreement amount:	$_____
Net change for prior amendments:	$_____
This amendment amount:	$_____
Adjusted Agreement amount:	$_____

Change in time for services (days or date, as applicable): _____

The foregoing Agreement Summary is for reference only and does not alter the terms of the Agreement, including those set forth in Exhibit C.

Copyright © 2013 National Society of Professional Engineers, American Council of Engineering Companies, and American Society of Civil Engineers. All rights reserved.

Owner and Engineer hereby agree to modify the above-referenced Agreement as set forth in this Amendment. All provisions of the Agreement not modified by this or previous Amendments remain in effect.

OWNER:	ENGINEER:
_____	_____
By: _____	By: _____
Print name: _____	Print name: _____
Title: _____	Title: _____
Date Signed: _____	Date Signed: _____

Copyright © 2013 National Society of Professional Engineers, American Council of Engineering Companies, and American Society of Civil Engineers. All rights reserved.

CITY OF MITCHELL

City Council Meeting
Agenda Item Request

The deadline for agenda items is Wednesday at noon, prior to the City Council Meeting

Meeting Date Requested:	February 18, 2025	**Requested By:**	
Desired Action of City Council:			
Amount Budgeted in current fiscal year for this item (if applicable):	There are no funds budgeted for this project. Council will have to determine how to fund the project if it moves forward.		
Agenda Item:	Action to Approve Agreement #A2025-18, Schematic Design for Corn Palace Renovation with Schemmer		
Explanation/Background of Agenda Item Requested:	The City Council discussed the interior Corn Palace renovation project at their January 21st, 2025 meeting. Council asked that Schemmer provide a contract to proceed with the schematic design phase which will provide 2 options relating to the interior renovation of the east side of the Corn Palace along with other related improvements and mechanical upgrades. The proposed contract is limited to proceeding with the schematic design phase at the cost of $84,000. Completing the schematic design phase will help define the scope of future phases and guide the negotiation of that future contract and its fees.		

SCHEMMER

Design with Purpose. Build with Confidence.

February 18, 2025

City of Mitchell
PO Box 278
Mitchell, SD 57301

RE: Addition and renovation
Mitchell Corn Palace

We are pleased to submit this Agreement for schematic design services for the addition and remodel of The Corn Palace located at 604 N. Main Street, Mitchell, SD.

Initial Project and Design Program information

After consulting with City leaders, over 40 community members, and multiple open house sessions to receive feedback, Schemmer submitted a "Design Study for the World's Only Corn Palace" dated February 16, 2022. As requested, the study narrowed more than 11 design options down to three options labelled "Good", "Better", and "Best".

These options assume the roof and structural system of the roof will be designed to visually match the existing gymnasium's roof structure. As much as possible, the new interior shall complement the existing corn mural motif and provide for a continuity of visitor exhibit spaces. The addition should have exposed trusses with a wood ceiling decking to visually match the existing roof structure with the intent of exposing the existing structure at a later date.

In late 2024, Schemmer has been engaged with the City, exploring variations on the "Better" option consisting of demolition of the east section starting at the stage proscenium opening eastward to North Lawler Street, and replacing it with one additional 94' x 50' N-S basketball court and additional seating.

It was estimated that 1,270 bleacher seats may extend over the new court with additional upper-level retractable bleacher seats to the east. Depending on arrangement, it is estimated that 2,000 or more seats could be added to the existing number of "soft seats" located west of the basketball courts.

The floor level of the upper-level retractable seats should match the second-floor level of the existing Corn Palace. The top of the upper-level seats will exit at a 3rd level, accessed by stairs and a common elevator. Once the upper-level seats are retracted, the second floor of the addition should be available for additional events.

The exterior will likely be brick to match existing but consider both brick and precast for their cost and compatibility. Although there will be no provision for exterior plywood corn murals, consider options for permanent corn-mural-like exterior wall surfaces.

PHONE 605.332.7850
FAX 605.332.3539
1300 W 57th Street, Suite #2
Sioux Falls, South Dakota 57108
SCHEMMER.COM

The design shall also incorporate the following spaces and upgrades:

- 4 locker rooms sized the same as the existing locker rooms, each with 4 showers (6 would be nice but only if it is economical to square off a space), 2 toilet stalls (no urinals – pending approval of the plumbing inspector), and 2 lavs. Home and visiting teams shall have separate paths to and from the courts.
- Official's Suite with a common center to 2 toilet/shower rooms. Officials shall be separated from the teams.
- Green Room/staging area
- Training room at ½ or less of the current training room's size.
- Stairs, elevator, toilet rooms as necessary for the occupant load(s).
- Connection of the addition's second floor across both endzones of the basketball courts, to the existing West second floor (pending resolution of Overhead door sizes to the north).
- New mechanical and electrical services as required to replace those demolished by the addition and sized to reasonably accommodate anticipated future remodel per the 2022 study.
- Replace the boilers and pump replacement. $600,000. *
- New chillers. $800,000*.
- 4 new air handling unites. $1,200,000*.
- Update the Freight Elevator. $550,000*

*Upon execution of this agreement, the Owner will provide quotes it has previously obtained, with contact information for Schemmer to coordinated systems with these suppliers.

Architectural Services:

The Architect will consult with the Owner to provide two schematic design concepts that consider a) an option that provides for zero to minimal down-time due to mechanical, electrical, and other considerations and b) an option that provides for a compact design that may result in more down-time but less construction costs.

Deliverables for each option:

- First floor plan with seating in-place and retracted
- Second floor plan with seating in-place and retracted
- Third floor plan with all seating in-place
- East-west section
- North-south section
- South, East, and North exterior elevations
- Sketches, 3D images, or renderings provided at the architect's discretion
- Written outline of architectural specifications
- Written narrative of mechanical system
- Written narrative of electrical system
- Probable Cost of Construction
- Estimation of probable construction time

Assumptions

- The architect will rely on scans obtained for the 2022 report.
- Design of the existing building is limited to the extent of physical changes discussed above.
- Design of restrooms will be limited to any required in the new addition.

Exclusions

- Plats or survey information
- Rezoning, easements, property line adjustments or special/conditional use permits
- Geotechnical
- Off-site improvements
- Structural strengthening of existing systems
- Upgrades to existing building systems that are not interconnected with new systems discussed above.
- Anything not specifically mentioned above.

Client's Responsibility

The Owner identifies Joe Schroeder as Its representative who is authorized to act on the Owner's behalf with respect to this project. The Owner shall:

- Provide information pertaining to any changes to the existing building or its systems that may have occurred since the date of the 2021 scans.
- Furnish existing plans, site utilities, surveys, geotechnical information, legal information, grades, lines of streets, pavements, adjoining property, and restrictions.
- Communicate any changes to the Architect and City including design objectives, special requirements, and budget.
- Render decisions and approve the Architect's submittals in a timely manner.

Schedule

Following a notice to proceed, Schemmer will work with the Client to establish a mutually agreeable schedule for the proposed services.

Compensation

$84,000.00 Invoiced monthly based on the percentage of completion.

Reimbursable expenses shall be invoiced at cost plus 15 percent. Anticipated reimbursable expenses for this project include travel and subsistence.

Additional Services

For services requested by the Owner and not contemplated by this agreement, Schemmer will prepare and present a request for additional compensation, and provide such services once authorized.

Acceptance

If this Agreement and the attached General Conditions meet with your approval, please sign both copies and return one copy for our files. The executed Agreement will serve as our notice to proceed.

Thank you for this opportunity to be of service. We look forward to working with you once again.

Respectfully,

The Schemmer Associates, Inc.

By:_____
Dan Kerns, NCARB, AIA

Date: 2/12/2025

Title: Principal

ACCEPTED: City of Mitchell, SD

BY:_____

Date: _____

Title: _____

GENERAL CONDITIONS

1. **REUSE OF DOCUMENTS**. All raw data. studies. reports, CADD files, and other work products of The Schemmer Associates Inc. for this project ("Project Documents") are instruments of service for the project only and shall be deemed the joint property of The Schemmer Associates Inc. and Client whether the project is completed or not. The Client may make and retain copies of the Project Documents which may be used by the Client and others. Both The Schemmer Associates Inc. and Client may use the Project Documents for their own purposes outside of the project when appropriate. However, the Project Documents are not intended or represented to be suitable for reuse by the Client or others on extensions of the project or on any other project. Any such use without written verification or adaptation by The Schemmer Associates Inc. for the specific purpose intended will be at Client's sole risk and without liability or legal exposure to The Schemmer Associates Inc. and the Client shall indemnify and hold harmless The Schemmer Associates Inc. and their consultants and each of their officers. agents. and employees from any and all liability claims losses. damage and expenses, including attorney's fees, arising out of or resulting from the negligent use or intentional misuse of the Project Documents by Client.

2. **ESTIMATES**. Since The Schemmer Associates Inc. has no control over the cost of labor, materials or equipment or over the contractor(s)' methods of determining prices, or over competitive bidding or market conditions, estimates of project cost are made on the basis of experience and qualifications and represent the best judgment of design professionals familiar with the industry, but The Schemmer Associates Inc. cannot and does not guarantee that proposals, bids or project costs will not vary from estimates of cost prepared by The Schemmer Associates Inc.

3. **SUSPENSION OR ABANDONMENT**. If the project is suspended for more than three months or abandoned in whole or in part, The Schemmer Associates Inc. shall be paid compensation for services performed prior to receipt of written notice of such suspension or abandonment, together with reimbursable expenses then due. If, after a period of suspension, the project is restarted, The Schemmer Associates Inc. shall be entitled to payment for any increased costs it incurs as a result of the suspension.

4. **TERMINATION**. This Agreement may be terminated by either party upon seven days' written notice should either party fail substantially to perform in accordance with its terms through no fault of the other. In the event of termination due to the fault of others than The Schemmer Associates Inc., The Schemmer Associates Inc. shall be paid for services performed prior to termination, including reimbursable expenses.

5. **SUCCESSORS AND ASSIGNS**. Each party to this Agreement binds him/herself, his/her partners, successors, assigns and legal representatives to the other party, his/her partners, successors, assigns and legal representatives with respect to all covenants of this Agreement. Neither party shall assign, sublet or transfer his/her interest in this Agreement without the written consent of the other, which consent may be withheld in the sole discretion of the non-assigning party.

6. **PAYMENTS**. Payments due The Schemmer Associates Inc. under this Agreement shall be payable within thirty (30) days of the date of billing. If full payment is not received within sixty (60) days of the date of billing, the unpaid amount shall bear interest at the highest rate permitted by law but not exceeding eighteen percent (18%) from the date of billing, except in the case of a billing dispute between the parties.

7. **DELINQUENT PAYMENTS**. If any payment due hereunder remains unpaid for a period of sixty (60) days after invoice, The Schemmer Associates Inc. may, in its sole discretion, cease providing services and not resume providing services until all amounts owing have been paid in full. Cessation of service for nonpayment shall not constitute breach by The Schemmer Associates Inc. of this agreement, or an election of remedies, and Client shall fully indemnify The Schemmer Associates Inc. for any liability or damages caused thereby.

8. **TAX**. The amount of any excise, gross receipts or sales tax that may be due as a result of the work performed by The Schemmer Associates Inc. shall be invoiced to Client as a reimbursable expense.

9. **HAZARDOUS MATERIALS**. Unless otherwise provided in this Agreement, The Schemmer Associates and The Schemmer Associates' consultants shall have no responsibility for the discovery, presence, handling, removal or disposal of or exposure of persons to hazardous materials in any form, including but not limited to asbestos, asbestos products, polychlorinated biphenyl (PCB) or other toxic substances. Client shall indemnify and hold The Schemmer Associates Inc. harmless from and against all claims arising out of or related in any way to hazardous materials.

10. **NOTICE OF LIMITATION OF AGENTS' AUTHORITY**. Client understands and agrees that no agent, officer, or principal of The Schemmer Associates Inc. is authorized to vary the terms of this agreement in any way except by a written amendment signed by both parties, expressly varying the terms of this Agreement.

11. **INVALIDATION OF PROFESSIONAL LIABILITY INSURANCE**. The Schemmer Associates Inc. agrees that it shall not knowingly take any action which shall cause loss of The Schemmer Associates' professional liability insurance coverage for this project or any aspect of it.

12. **LIMITATION OF LIABILITY**. To the fullest extent permitted by law, the Client agrees that The Schemmer Associates Inc.'s liability to Client for damages arising out of or in any way related to its work in connection with the project or any error or deficiency in the Instruments of Service for the project, whether arising in contract, tort or otherwise, including, but not limited to, claims for indemnity or contribution shall be limited to the sum of $50,000 or the amount paid to The Schemmer Associates Inc. as fees under this Agreement, whichever is greater. This limitation shall apply regardless of the cause of action or legal theory asserted.

13. **COMPUTER AIDED DESIGN/DRAFTING (CADD)**. CADD may be utilized to prepare drawings, specifications, calculations, and other instruments of service prepared by The Schemmer Associates Inc. Submitted data files are intended to work only as described in the agreement and are compatible only with the original hardware and software used to create the files.

13.1 Electronic files will be submitted to the Client for a 30-day acceptance period ("the Acceptance Period"). During this period, the Client may review and examine the files. Any errors discovered during the Acceptance Period will be corrected by The Schemmer Associates Inc. at no additional cost to Client. The Schemmer Associates Inc. will not maintain copies of the electronic files beyond the end of the Acceptance Period.

13.2 Because data stored on electronic media can deteriorate undetected or be modified without the knowledge of The Schemmer Associates Inc., Client agrees to accept responsibility for the completeness, correctness, and readability of the electronic media after the end of the Acceptance Period. Client agrees that it will indemnify and save harmless The Schemmer Associates Inc. from any and all claims, losses, costs, damages, awards, or judgments arising from Client's use of the electronic media files or output generated from them. Upon the expiration of the Acceptance Period, The Schemmer Associates Inc. agrees that it is responsible for the accuracy of the sealed hard copy drawings that are submitted by it to Client. "Accuracy" as used in this paragraph is defined as meeting the care and skill ordinarily used by members of the professional practicing under similar conditions at the same time and in the same locality.

13.3 The Client shall be permitted to retain copies of the drawings and specifications prepared in CADD format for the Client's information. Due to the potential that the information set forth on the electronic media can be modified by the Client, unintentionally or otherwise, The Schemmer Associates Inc. reserves the right to remove all indicia of its ownership and/or involvement from each electronic file.

14. **LIMITATION OF WARRANTY**. The Schemmer Associates Inc. makes no warranties, express or implied, under this agreement or otherwise, in connection with the services provided.

15. **WAIVER OF CONSEQUENTIAL DAMAGES.** The Schemmer Associates Inc and the Client waive all consequential damages for claims, disputes, or other matters in question, arising out of or relating to this Agreement. This mutual waiver is applicable, without limitation, to all consequential damages due to either party's termination of this Agreement

16. **STANDARD OF CARE.** The Schemmer Associate Inc shall perform its services consistent with the professional skill and care ordinarily provided by others practicing in the same or similar locality under the same or similar circumstances.

17. **GEOTECHNICAL MATERIALS TESTING SERVICE**. In the case that geotechnical and/or materials testing services are provided by The Schemmer Associates Inc., our supplementary General Conditions for Geotechnical and Materials Testing shall be considered a part of this document.

18. **CONSTRUCTION STAKING**. In the case that construction staking services are provided by The Schemmer Associates Inc., our supplementary General Conditions for Construction Staking shall be considered a part of this document.

End of General Conditions

CITY OF MITCHELL

City Council Meeting
Agenda Item Request

The deadline for agenda items is Wednesday at noon, prior to the City Council Meeting

Meeting Date Requested:	February 18, 2025	**Requested By:**	Joe Schroeder
Desired Action of City Council:	Action to Approve		
Amount Budgeted in current fiscal year for this item (if applicable):	201-45210-43300, $400,000		
Agenda Item:	Action to Award Hitchcock Park Pickleball Courts Project #2023-14		

Explanation/Background of Agenda Item Requested:

Bids were opened on February 11, 2025 in City Hall at 2:00 PM. Seven bids were received as follows:

Explanation of Bids
Bid Schedule A - Base Bid for removals, drainage and site work.
Bid Schedule 1A - 6" Concrete Surfacing with #4 Rebar two foot on center.
Bid Schedule 1B - 6" Post-Tensioned Concrete Surfacing
Bid Schedule 2A - Vinyl Chain Link Fencing
Bid Schedule 2B - Galvanized Chain Link Fencing
Bid Schedule 3 - Site Lighting

Rexwinkel Concrete
Bid Schedule A - $174,886
Bid Schedule 1A - $88,070.40
Bid Schedule 1B - No Bid
Bid Schedule 2A - $71,368.00
Bid Schedule 2B - $61,190.80
Bid Schedule 3 - $64,676.70

Lt Companies, Inc.
Bid Schedule A - $210,714.50
Bid Schedule 1A - $114,048.00
Bid Schedule 1B - $144,460.80
Bid Schedule 2A - $60,598.60
Bid Schedule 2B - $58,295.62
Bid Schedule 3 - $50,500.00

Timmons Construction, Inc.
Bid Schedule A - $217,064.37
Bid Schedule 1A - $115,315.20
Bid Schedule 1B - $148,262.40
Bid Schedule 2A - $52,236.00
Bid Schedule 2B - $44,846.40
Bid Schedule 3 - $53,900.00

Schoenfelder Construction
Bid Schedule A - $255,394.70
Bid Schedule 1A - $98,208.00
Bid Schedule 1B - $222,393.60
Bid Schedule 2A - $71,192.00

Bid Schedule 2B - $61,140.00
Bid Schedule 3 - $54,000

Schwartzle Construction
Bid Schedule A - $240,822.00
Bid Schedule 1A - $120,384.00
Bid Schedule 1B - $188,939.52
Bid Schedule 2A - $71,680.00
Bid Schedule 2B - $61,648.00
Bid Schedule 3 - $66,000.00

C. Eagle Construction, LLC
Bid Schedule A - $259,033.00
Bid Schedule 1A - $134,323.20
Bid Schedule 1B - No Bid
Bid Schedule 2A - $91,498.12
Bid Schedule 2B - $78,081.20
Bid Schedule 3 - $57,000

Hulstein Excavating
Bid Schedule A - $367,880.50
Bid Schedule 1A - $86,169.60
Bid Schedule 1B - $155,865.60
Bid Schedule 2A - $77,762.00
Bid Schedule 2B - $62,041.00
Bid Schedule 3 - $49,200.00

Engineer's Estimate
Bid Schedule A - $212,867.50
Bid Schedule 1A - $126,720.00
Bid Schedule 1B - $253,440.00
Bid Schedule 2A - $62,600.00
Bid Schedule 2B - $40,400.00
Bid Schedule 3 - $85,000.00

Please see the attached bid tabulation for detailed information.

Current Project Budget-$425,000
Professional Services - $62,500
Bid Recommendation - Rexwinkel Concrete
Base Bid - $174,886
Bid Schedule 1A - $88,070.40 (6" concrete surfacing with rebar)
Bid Schedule 2A - $71,368.00 (Vinyl Chain Link Fencing)
Bid Schedule 3 - $64,676.70
Total Bid Amount - $399,001.10
Budget Shortfall - $36,501.10
Requested additional dollars for the project - $80,000

Staff recommends awarding the bid to Rexwinkel Construction as described above for a total bid amount of $399,001.10.

Hitchcock Park Pickleball Courts
Bid Tabulation
SPN #16533
Bid Date: February 11th, 2025

Bid Schedule A

Item	Description	Quantity	Rexwinkle Concrete 255 S Industrial Ave. Corsica, SD 57328		LT Companies Inc. 27070 Duke Ave. Tea, SD 57064		Timmons Construction Inc. 1306 Western Ave. Brookings, SD 57006	
			Unit Price	Total Price	Unit Price	Total Price	Unit Price	Total Price
1	Mobilization	1 LS	$31,936.24	$31,936.24	$43,500.00	$43,500.00	$20,000.00	$20,000.00
2	Remove and Dispose Tree Stump	13 Each	$264.43	$3,437.59	$200.00	$2,600.00	$1,110.00	$14,430.00
3	Remove, Stockpile and Place Topsoil	650 CuYd	$11.55	$7,507.50	$4.50	$2,925.00	$22.20	$14,430.00
4	Unclassified Excavation and Embankment	116 CuYd	$11.55	$1,339.80	$6.00	$696.00	$33.30	$3,862.80
5	4" PVC Drain Tile	220 LF	$12.51	$2,752.20	$24.00	$5,280.00	$31.64	$6,960.80
6	Drain Tile Cleanout	1 Each	$137.50	$137.50	$800.00	$800.00	$999.00	$999.00
7	Drain Tile Outlet	1 LS	$137.50	$137.50	$800.00	$800.00	$555.00	$555.00
8	Granular Subbase	1,300 Ton	$19.94	$25,922.00	$24.00	$31,200.00	$22.20	$28,860.00
9	8" Base Course	750 Ton	$19.94	$14,955.00	$24.00	$18,000.00	$24.42	$18,315.00
10	Geotextile Separator Fabric	1,560 SqYd	$7.43	$11,590.80	$2.00	$3,120.00	$11.10	$17,316.00
11	15 Mil Poly Vapor Barrier	1,560 SqYd	$2.70	$4,212.00	$2.00	$3,120.00	$4.20	$6,552.00
12	12" PCC Surfacing (Mow Strip)	1,064 SqFt	$10.25	$10,906.00	$20.00	$21,280.00	$22.50	$23,940.00
13	Liquid Applied Acrylic Surfacing	1 LS	$30,000.00	$30,000.00	$38,000.00	$38,000.00	$23,000.00	$23,000.00
14	Court Marking and Striping	1 LS	$4,000.00	$4,000.00	$7,000.00	$7,000.00	$11,435.37	$11,435.37
15	4" Concrete Sidewalk	2,367 SqFt	$7.25	$17,160.75	$8.00	$18,936.00	$8.00	$18,936.00
16	Furnish and Install Netting System	6 Each	$1,316.67	$7,900.02	$2,000.00	$12,000.00	$980.40	$5,882.40
17	Seed, Fertilize and Mulch	1,925 SqYd	By Owner	By Owner	By Owner	By Owner	By Owner	By Owner
18	Seed and Fertilize	330 SqYd	By Owner	By Owner	By Owner	By Owner	By Owner	By Owner
19	Erosion Control Blanket	330 SqYd	By Owner	By Owner	By Owner	By Owner	By Owner	By Owner
20	Silt Fence	265 LF	$3.74	$991.10	$5.50	$1,457.50	$6.00	$1,590.00
Total Bid Schedule A				$174,886.00		$210,714.50		$217,064.37

Bid Schedule 1A

Item	Description	Quantity	Rexwinkle Concrete 255 S Industrial Ave. Corsica, SD 57328		LT Companies Inc. 27070 Duke Ave. Tea, SD 57064		Timmons Construction Inc. 1306 Western Ave. Brookings, SD 57006	
			Unit Price	Total Price	Unit Price	Total Price	Unit Price	Total Price
1	6" PCC Surfacing w/ 24" O.C. #4 Rebar	12672 SqFt	$6.95	$88,070.40	$9.00	$114,048.00	$9.10	$115,315.20
Total Bid Schedule 1A				$88,070.40		$114,048.00		$115,315.20

Bid Schedule 1B

Item	Description	Quantity	Rexwinkle Concrete 255 S Industrial Ave. Corsica, SD 57328		LT Companies Inc. 27070 Duke Ave. Tea, SD 57064		Timmons Construction Inc. 1306 Western Ave. Brookings, SD 57006	
			Unit Price	Total Price	Unit Price	Total Price	Unit Price	Total Price
1	6" Post-Tensioned PCC Pavements	12672 SqFt		NO BID	$11.40	$144,460.80	$11.70	$148,262.40
Total Bid Schedule 1B				NO BID		$144,460.80		$148,262.40

Bid Schedule 2A

Item	Description	Quantity	Rexwinkle Concrete 255 S Industrial Ave. Corsica, SD 57328		LT Companies Inc. 27070 Duke Ave. Tea, SD 57064		Timmons Construction Inc. 1306 Western Ave. Brookings, SD 57006	
			Unit Price	Total Price	Unit Price	Total Price	Unit Price	Total Price
1	Furnish and Install 4' Vinyl Chain-Link Fence	112 LF	$83.05	$9,301.60	$56.00	$6,272.00	$66.00	$7,392.00
2	Furnish and Install 8' Vinyl Chain-Link Fence	508 LF	$102.30	$51,968.40	$93.95	$47,726.60	$78.00	$39,624.00
3	Furnish and Install 8'x4' Vinyl Chain-Link Gate	6 Each	$1,683.00	$10,098.00	$1,100.00	$6,600.00	$870.00	$5,220.00
Total Bid Schedule 2A				$71,368.00		$60,598.60		$52,236.00

Bid Schedule 2B

Item	Description	Quantity	Rexwinkle Concrete 255 S Industrial Ave. Corsica, SD 57328		LT Companies Inc. 27070 Duke Ave. Tea, SD 57064		Timmons Construction Inc. 1306 Western Ave. Brookings, SD 57006	
			Unit Price	Total Price	Unit Price	Total Price	Unit Price	Total Price
1	Furnish and Install 4' Galvanized Chain-Link Fence	112 LF	$71.50	$8,008.00	$50.00	$5,600.00	$60.00	$6,720.00
2	Furnish and Install 8' Galvanized Chain-Link Fence	508 LF	$89.10	$45,262.80	$90.74	$46,095.92	$70.80	$35,966.40
3	Furnish and Install 8'x4' Galvanized Chain-Link Gate	6 Each	$1,320.00	$7,920.00	$1,100.00	$6,600.00	$360.00	$2,160.00
Total Bid Schedule 2B				$61,190.80		$58,295.92		$44,846.40

Bid Schedule 3

Item	Description	Quantity	Rexwinkle Concrete 255 S Industrial Ave. Corsica, SD 57328		LT Companies Inc. 27070 Duke Ave. Tea, SD 57064		Timmons Construction Inc. 1306 Western Ave. Brookings, SD 57006	
			Unit Price	Total Price	Unit Price	Total Price	Unit Price	Total Price
1	Controls, Wiring, Light Poles and Light Pole Installation	1 LS	$48,816.90	$48,816.90	$40,000.00	$40,000.00	$36,100.00	$36,100.00
2	Light Pole Concrete Bases and Complete Conduit Installation	1 LS	$15,859.80	$15,859.80	$10,500.00	$10,500.00	$17,800.00	$17,800.00
Total Bid Schedule 3				$64,676.70		$50,500.00		$53,900.00

Total Bid Schedule A, 1A, 2A, C	$399,001.10	$435,861.10	$438,515.57
Total Bid Schedule A, 1A, 2B, C	$388,823.90	$433,558.42	$431,125.97
Total Bid Schedule A, 1B, 2A, C	No Bid	$466,273.90	$471,462.77
Total Bid Schedule A, 1B, 2B, C	No Bid	$463,971.22	$464,073.17

Hitchcock Park Pickleball Courts
Bid Tabulation
SPN #16533
Bid Date: February 11th, 2025

Bid Schedule A

Item	Description	Quantity	Schoenfelder Construction, 3131 W Havens St., Mitchell, SD 57301		Schwartzle Construction, 100 E Lipton St., Tea, SD 57064		C. Eagle Construction, LLC, 206 W 3rd St., Woonsocket, SD 57385	
			Unit Price	Total Price	Unit Price	Total Price	Unit Price	Total Price
1	Mobilization	1 LS	$10,980.00	$10,980.00	$28,146.50	$28,146.50	$24,600.00	$24,600.00
2	Remove and Dispose Tree Stump	13 Each	$1,000.00	$13,000.00	$900.00	$11,700.00	$300.00	$3,900.00
3	Remove, Stockpile and Place Topsoil	650 CuYd	$20.00	$13,000.00	$26.00	$16,900.00	$18.00	$11,700.00
4	Unclassified Excavation and Embankment	116 CuYd	$30.00	$3,480.00	$30.00	$3,480.00	$18.00	$2,088.00
5	4" PVC Drain Tile	220 LF	$28.50	$6,270.00	$30.00	$6,600.00	$15.00	$3,300.00
6	Drain Tile Cleanout	1 Each	$900.00	$900.00	$450.00	$450.00	$250.00	$250.00
7	Drain Tile Outlet	1 LS	$500.00	$500.00	$450.00	$450.00	$600.00	$600.00
8	Granular Subbase	1,300 Ton	$20.00	$26,000.00	$27.00	$35,100.00	$25.00	$32,500.00
9	8" Base Course	750 Ton	$22.00	$16,500.00	$25.00	$18,750.00	$25.00	$18,750.00
10	Geotextile Separator Fabric	1,560 SqYd	$10.00	$15,600.00	$8.00	$12,480.00	$8.50	$13,260.00
11	15 Mil Poly Vapor Barrier	1,560 SqYd	$3.00	$4,680.00	$2.90	$4,524.00	$3.50	$5,460.00
12	12" PCC Surfacing (Mow Strip)	1,064 SqFt	$11.80	$12,555.20	$23.00	$24,472.00	$25.00	$26,600.00
13	Liquid Applied Acrylic Surfacing	1 LS	$72,457.00	$72,457.00	$35,000.00	$35,000.00	$75,000.00	$75,000.00
14	Court Marking and Striping	1 LS	$6,600.00	$6,600.00	$5,000.00	$5,000.00	$3,500.00	$3,500.00
15	4" Concrete Sidewalk	2,367 SqFt	$7.50	$17,752.50	$8.50	$20,119.50	$10.00	$23,670.00
16	Furnish and Install Netting System	6 Each	$5,500.00	$33,000.00	$2,500.00	$15,000.00	$2,000.00	$12,000.00
17	Seed, Fertilize and Mulch	1,925 SqYd	By Owner	By Owner	By Owner	By Owner	By Owner	By Owner
18	Seed and Fertilize	330 SqYd	By Owner	By Owner	By Owner	By Owner	By Owner	By Owner
19	Erosion Control Blanket	330 SqYd	By Owner	By Owner	By Owner	By Owner	By Owner	By Owner
20	Silt Fence	265 LF	$8.00	$2,120.00	$10.00	$2,650.00	$7.00	$1,855.00
Total Bid Schedule A				$255,394.70		$240,822.00		$259,033.00

Bid Schedule 1A

Item	Description	Quantity	Schoenfelder Construction, 3131 W Havens St., Mitchell, SD 57301		Schwartzle Construction, 100 E Lipton St., Tea, SD 57064		C. Eagle Construction, LLC, 206 W 3rd St., Woonsocket, SD 57385	
			Unit Price	Total Price	Unit Price	Total Price	Unit Price	Total Price
1	6" PCC Surfacing w/ 24" O.C. #4 Rebar	12672 SqFt	$7.75	$98,208.00	$9.50	$120,384.00	$10.60	$134,323.20
Total Bid Schedule 1A				$98,208.00		$120,384.00		$134,323.20

Bid Schedule 1B

Item	Description	Quantity	Schoenfelder Construction, 3131 W Havens St., Mitchell, SD 57301		Schwartzle Construction, 100 E Lipton St., Tea, SD 57064		C. Eagle Construction, LLC, 206 W 3rd St., Woonsocket, SD 57385	
			Unit Price	Total Price	Unit Price	Total Price	Unit Price	Total Price
1	6" Post-Tensioned PCC Pavements	12672 SqFt	$17.55	$222,393.60	$14.91	$188,939.52		NO BID
Total Bid Schedule 1B				$222,393.60		$188,939.52		NO BID

Bid Schedule 2A

Item	Description	Quantity	Schoenfelder Construction, 3131 W Havens St., Mitchell, SD 57301		Schwartzle Construction, 100 E Lipton St., Tea, SD 57064		C. Eagle Construction, LLC, 206 W 3rd St., Woonsocket, SD 57385	
			Unit Price	Total Price	Unit Price	Total Price	Unit Price	Total Price
1	Furnish and Install 4' Vinyl Chain-Link Fence	112 LF	$83.00	$9,296.00	$90.00	$10,080.00	$209.00	$23,408.00
2	Furnish and Install 8' Vinyl Chain-Link Fence	508 LF	$102.00	$51,816.00	$100.00	$50,800.00	$111.89	$56,840.12
3	Furnish and Install 8'x4' Vinyl Chain-Link Gate	6 Each	$1,680.00	$10,080.00	$1,800.00	$10,800.00	$1,875.00	$11,250.00
Total Bid Schedule 2A				$71,192.00		$71,680.00		$91,498.12

Bid Schedule 2B

Item	Description	Quantity	Schoenfelder Construction, 3131 W Havens St., Mitchell, SD 57301		Schwartzle Construction, 100 E Lipton St., Tea, SD 57064		C. Eagle Construction, LLC, 206 W 3rd St., Woonsocket, SD 57385	
			Unit Price	Total Price	Unit Price	Total Price	Unit Price	Total Price
1	Furnish and Install 4' Galvanized Chain-Link Fence	112 LF	$71.50	$8,008.00	$80.00	$8,960.00	$142.00	$15,904.00
2	Furnish and Install 8' Galvanized Chain-Link Fence	508 LF	$89.00	$45,212.00	$86.00	$43,688.00	$108.40	$55,067.20
3	Furnish and Install 8'x4' Galvanized Chain-Link Gate	6 Each	$1,320.00	$7,920.00	$1,500.00	$9,000.00	$1,185.00	$7,110.00
Total Bid Schedule 2B				$61,140.00		$61,648.00		$78,081.20

Bid Schedule 3

Item	Description	Quantity	Schoenfelder Construction, 3131 W Havens St., Mitchell, SD 57301		Schwartzle Construction, 100 E Lipton St., Tea, SD 57064		C. Eagle Construction, LLC, 206 W 3rd St., Woonsocket, SD 57385	
			Unit Price	Total Price	Unit Price	Total Price	Unit Price	Total Price
1	Controls, Wiring, Light Poles and Light Pole Installation	1 LS	$36,000.00	$36,000.00	$49,000.00	$49,000.00	$43,000.00	$43,000.00
2	Light Pole Concrete Bases and Complete Conduit Installation	1 LS	$18,000.00	$18,000.00	$17,000.00	$17,000.00	$14,000.00	$14,000.00
Total Bid Schedule 3				$54,000.00		$66,000.00		$57,000.00

Total Bid Schedule A, 1A, 2A, C	$478,794.70	$498,886.00	$541,854.32
Total Bid Schedule A, 1A, 2B, C	$468,742.70	$488,854.00	$528,437.40
Total Bid Schedule A, 1B, 2A, C	$602,980.30	$567,441.52	NO BID
Total Bid Schedule A, 1B, 2B, C	$592,928.30	$557,409.52	NO BID

Hitchcock Park Pickleball Courts
Bid Tabulation
SPN #16533
Bid Date: February 11th, 2025

Bid Schedule A

Item	Description	Quantity	Hulstein Excavating 147 175th Ave. Edgerton, MN 56128 Unit Price	Total Price	Engineer's Estiamte Unit Price	Total Price
1	Mobilization	1 LS	$108,700.00	$108,700.00	$27,800.00	$27,800.00
2	Remove and Dispose Tree Stump	13 Each	$620.00	$8,060.00	$750.00	$9,750.00
3	Remove, Stockpile and Place Topsoil	650 CuYd	$18.50	$12,025.00	$15.00	$9,750.00
4	Unclassified Excavation and Embankment	116 CuYd	$11.25	$1,305.00	$15.00	$1,740.00
5	4" PVC Drain Tile	220 LF	$14.00	$3,080.00	$30.00	$6,600.00
6	Drain Tile Cleanout	1 Each	$600.00	$600.00	$1,000.00	$1,000.00
7	Drain Tile Outlet	1 LS	$265.00	$265.00	$200.00	$200.00
8	Granular Subbase	1,300 Ton	$42.50	$55,250.00	$30.00	$39,000.00
9	8" Base Course	750 Ton	$40.50	$30,375.00	$30.00	$22,500.00
10	Geotextile Separator Fabric	1,560 SqYd	$3.75	$5,850.00	$3.00	$4,680.00
11	15 Mil Poly Vapor Barrier	1,560 SqYd	$1.50	$2,340.00	$4.00	$6,240.00
12	12" PCC Surfacing (Mow Strip)	1,064 SqFt	$15.50	$16,492.00	$20.00	$21,280.00
13	Liquid Applied Acrylic Surfacing	1 LS	$66,625.00	$66,625.00	$21,000.00	$21,000.00
14	Court Marking and Striping	1 LS	$6,070.00	$6,070.00	$4,200.00	$4,200.00
15	4" Concrete Sidewalk	2,367 SqFt	$8.00	$18,936.00	$10.00	$23,670.00
16	Furnish and Install Netting System	6 Each	$5,075.00	$30,450.00	$2,000.00	$12,000.00
17	Seed, Fertilize and Mulch	1,925 SqYd	By Owner	By Owner	By Owner	By Owner
18	Seed and Fertilize	330 SqYd	By Owner	By Owner	By Owner	By Owner
19	Erosion Control Blanket	330 SqYd	By Owner	By Owner	By Owner	By Owner
20	Silt Fence	265 LF	$5.50	$1,457.50	$5.50	$1,457.50
Total Bid Schedule A				$367,880.50		$212,867.50

Bid Schedule 1A

Item	Description	Quantity	Hulstein Excavating 147 175th Ave. Edgerton, MN 56128 Unit Price	Total Price	Engineer's Estimate Unit Price	Total Price
1	6" PCC Surfacing w/ 24" O.C. #4 Rebar	12672 SqFt	$6.80	$86,169.60	$10.00	$126,720.00
Total Bid Schedule 1A				$86,169.60		$126,720.00

Bid Schedule 1B

Item	Description	Quantity	Hulstein Excavating 147 175th Ave. Edgerton, MN 56128 Unit Price	Total Price	Engineer's Estimate Unit Price	Total Price
1	6" Post-Tensioned PCC Pavements	12672 SqFt	$12.30	$155,865.60	$20.00	$253,440.00
Total Bid Schedule 1B				$155,865.60		$253,440.00

Bid Schedule 2A

Item	Description	Quantity	Hulstein Excavating 147 175th Ave. Edgerton, MN 56128 Unit Price	Total Price	Engineer's Estimate Unit Price	Total Price
1	Furnish and Install 4' Vinyl Chain-Link Fence	112 LF	$67.00	$7,504.00	$65.00	$7,280.00
2	Furnish and Install 8' Vinyl Chain-Link Fence	508 LF	$113.50	$57,658.00	$90.00	$45,720.00
3	Furnish and Install 8'x4' Vinyl Chain-Link Gate	6 Each	$2,100.00	$12,600.00	$1,600.00	$9,600.00
Total Bid Schedule 2A				$77,762.00		$62,600.00

Bid Schedule 2B

Item	Description	Quantity	Hulstein Excavating 147 175th Ave. Edgerton, MN 56128 Unit Price	Total Price	Engineer's Estimate Unit Price	Total Price
1	Furnish and Install 4' Galvanized Chain-Link Fence	112 LF	$59.25	$6,636.00	$35.00	$3,920.00
2	Furnish and Install 8' Galvanized Chain-Link Fence	508 LF	$91.75	$46,609.00	$60.00	$30,480.00
3	Furnish and Install 8'x4' Galvanized Chain-Link Gate	6 Each	$1,466.00	$8,796.00	$1,000.00	$6,000.00
Total Bid Schedule 2B				$62,041.00		$40,400.00

Bid Schedule 3

Item	Description	Quantity	Hulstein Excavating 147 175th Ave. Edgerton, MN 56128 Unit Price	Total Price	Engineer's Estimate Unit Price	Total Price
1	Controls, Wiring, Light Poles and Light Pole Installation	1 LS	$36,900.00	$36,900.00	$75,000.00	$75,000.00
2	Light Pole Concrete Bases and Complete Conduit Installation	1 LS	$12,300.00	$12,300.00	$10,000.00	$10,000.00
Total Bid Schedule 3				$49,200.00		$85,000.00

Total Bid Schedule A, 1A, 2A, C	$581,012.10	$487,187.50
Total Bid Schedule A, 1A, 2B, C	$565,291.10	$464,987.50
Total Bid Schedule A, 1B, 2A, C	$650,708.10	$613,907.50
Total Bid Schedule A, 1B, 2B, C	$634,987.10	$591,707.50

I hereby certify that the foregoing is an accurate representation and tabulation of all bids received and that the mathematics have been checked and are to the best of my knowledge correct.

Jacob Sonne, P.E., Project Engineer, SPN & Associates

REGISTERED PROFESSIONAL ENGINEER
REG. NO.
15046
JACOB D.
SONNE
SOUTH DAKOTA

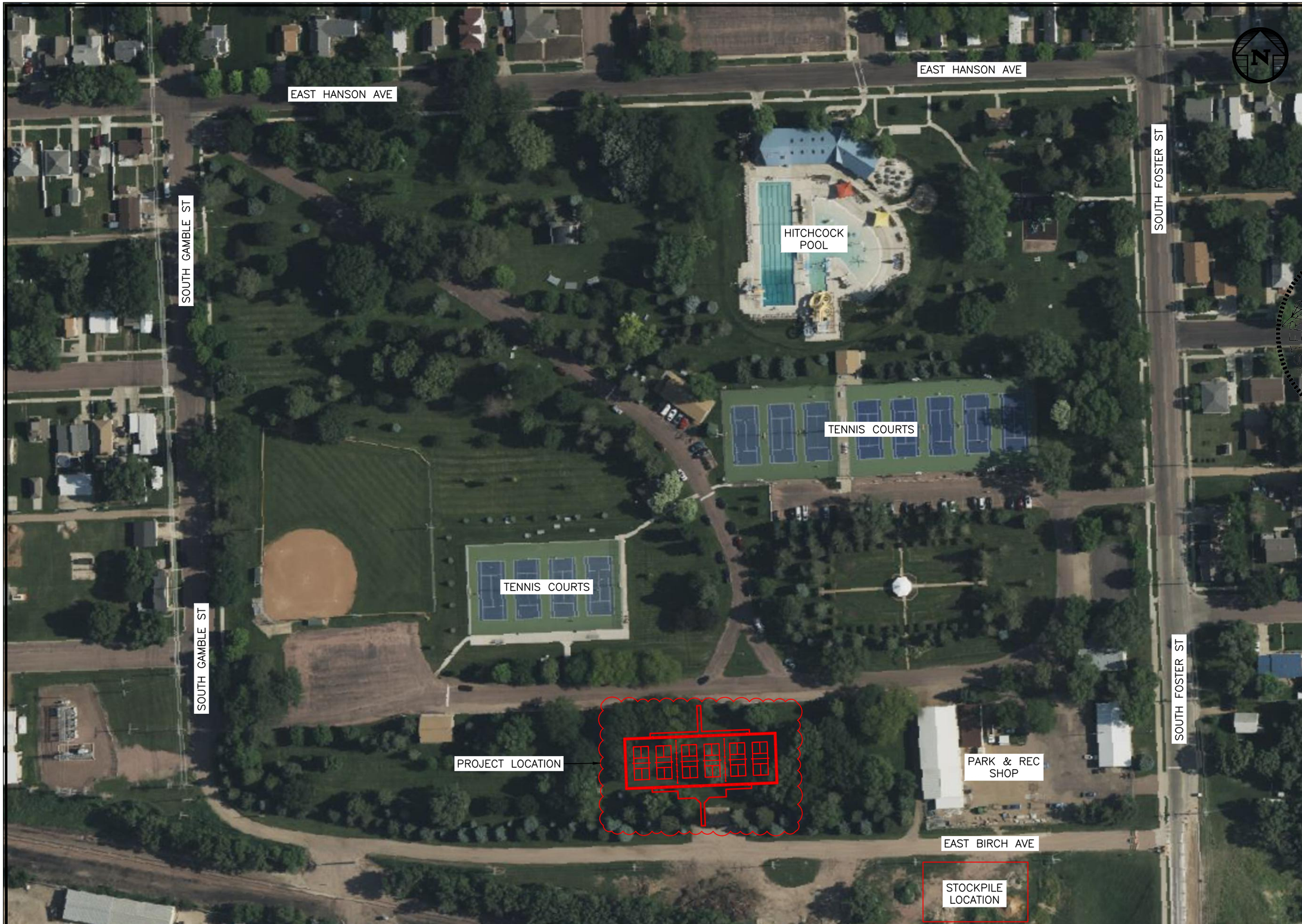

SPN & Associates

Engineers - Planners - Surveyors

2100 North Sanborn Boulevard - P.O. Box 398
Mitchell, South Dakota 57301-0398
Phone: (605) 996-7761 - Fax: (605) 996-0015

Certificate

I hereby certify that this plan, specification, or report was prepared by me or under my direct supervision and that I am a duly Registered Professional Engineer under the laws of the State of South Dakota.

PROFESSIONAL ENGINEER
REG. NO. 15046
JACOB D. SONNE
SOUTH DAKOTA
1-28-2025
#16533

Plan Horiz. Scale:	1" = 120'
Drawn By:	NAP
Checked By:	BMN
Date:	01/28/2025
Project No.:	16533
File Name:	16533–Hitchcock Park Pickleball

Project Name:
Hitchcock Park Pickleball Courts

Located in:
Mitchell, South Dakota

Sheet Name:
Location Map

Sheet Number:	Total Sheets:
4	16

G:\Files\CAD\Land Project R2 (Job #'s 16000+)\16533-Hitchcock Park Pickle Ball Courts\16533-Hitchcock Park Pickle Ball Courts.dwg, OAL, 1/28/2025 3:52:13 PM

CITY OF MITCHELL

City Council Meeting
Agenda Item Request

The deadline for agenda items is Wednesday at noon, prior to the City Council Meeting

Meeting Date Requested:	February 18, 2025	**Requested By:**	Joe Schroeder

Desired Action of City Council:	Action to Approve
Amount Budgeted in current fiscal year for this item (if applicable):	230-43500-43205, $1,621,129 City - $140,822.90 Grant - $1,370,400
Agenda Item:	Action to Award Bid for Mitchell Airport Revenue Producing Hangar
Explanation/Background of Agenda Item Requested:	Bids were opened on February 5, 2025 in City Hall at 1:30 PM. Five bids were received as follows: Explanation of Bids Bid Schedule A - Site Work Bid Schedule B - Hangar Construction (162'x50') Bid Schedule A1 - Site Work (54'x50' Hangar Bay) Bid Schedule B1 - Hangar Construction (54'x50' Bay) Bid Schedule B2 - Hangar Insulation Bid Schedule B3 - Hangar Insulation (54'x50' Hangar Bay) Bid Schedule B4 - Hangar Heater Units Bid Schedule B5 - Hangar Heater Unit (54'x54' Hangar Bay) VanderPol Dragline, Inc. Bid Schedule A - $53,771.15 Bid Schedule B - $1,021,675.00 Bid Schedule A1 - $33,364.60 Bid Schedule B1 - $270,000.00 Bid Schedule B2 - $21,000.00 Bid Schedule B3 - $7,000.00 Bid Schedule B4 - $35,250.00 Bid Schedule B5 - $8,375.00 Schmitz Construction, LLC Bid Schedule A - $106,636.46 Bid Schedule B - $1,062,622.61 Bid Schedule A1 - $41,371.13 Bid Schedule B1 - $277,533.55 Bid Schedule B2 - No Bid Bid Schedule B3 - No Bid Bid Schedule B4 - $600.00 Bid Schedule B5 - $200.00 Hegg Construction, LLC Bid Schedule A - $175,096.00 Bid Schedule B - $1,039,499.89 Bid Schedule A1 - $35,556.00 Bid Schedule B1 - $254,464.96 Bid Schedule B2 - $53,038.61 Bid Schedule B3 - $16,408.77

Bid Schedule B4 - $25,914.00
Bid Schedule B5 - $8,206.00

First Dakota Enterprises, Inc.
Bid Schedule A - $110,542.32
Bid Schedule B - $1,071,919.00
Bid Schedule A1 - $65,335.86
Bid Schedule B1 - $277,764.00
Bid Schedule B2 - $62,000.00
Bid Schedule B3 - $20,667.00
Bid Schedule B4 - $32,775.00
Bid Schedule B5 - $10,925.00

Pro Contracting - Non-Responsive

Engineer's Estimate
Bid Schedule A - $93,455.88
Bid Schedule B - $724,419.34
Bid Schedule A1 - $53,021.25
Bid Schedule B1 - $219,327.54
Bid Schedule B2 - $42,621.51
Bid Schedule B3 - $12,567.88
Bid Schedule B4 - $34,971.48
Bid Schedule B5 - $8,415.02

Current Project Budget-$1,621,129
Professional Services - $202,251.30
Bid Recommendation - VanderPol Dragline, Inc.
4-Unit Hangar W/ Insulation
Bid Schedule A - $53,771.15
Bid Schedule B - 1,021,675.00
Bid Schedule A1 - 33,364.60
Bid Schedule B1 - 270,000.00
Bid Schedule B2 - 21,000.00
Bid Schedule B3 - 7,000.00
Total Bid Amount - $1,406,810.75

Total Project Cost - $1,546,375.00
Requested additional dollars for the project - $100,000 (General Fund)

Staff recommends awarding the bid to VanderPol Dragline as described above for a total bid amount of $1,406,810.75.

REVENUE PRODUCING HANGAR
MITCHELL MUNICIPAL AIRPORT
MITCHELL, SOUTH DAKOTA
AIP #3-46-037-033-2025
HELMS #A-9432
BID TABULATION
FEBRUARY 5, 2025

Bid Schedule A - Site Work

					Pro Contracting Mitchell, SD		VanderPol Dragline, Inc. Mitchell, SD		Schmitz Construction, LLC Mitchell, SD	
Item #	**Spec #**	**Item Description**	**Quantity**	**Unit**	**Unit Price**	**Total Price**	**Unit Price**	**Total Price**	**Unit Price**	**Total Price**
1	C-105	Mobilization	1	L.S.	$ 8,496.20	$ 8,496.20	$ 4,500.00	$ 4,500.00	$ -	$ -
2	S-100	Construction Safety Phasing Plan	1	L.S.	$ 41,632.73	$ 41,632.73	$ 4,600.00	$ 4,600.00	$ 48,904.46	$ 48,904.46
3	Plans	6" Concrete Approach Pavement	322	SqYd	$ 74.61	$ 24,024.42	$ 68.20	$ 21,960.40	$ 78.80	$ 25,373.60
4	P-605	Silicone Joint Sealing Filler	432	Ft	$ 5.65	$ 2,440.80	$ 3.50	$ 1,512.00	$ 3.40	$ 1,468.80
5	SP-2	Geotextile Separator Fabric	338	SqYd	$ 6.37	$ 2,153.06	$ 5.00	$ 1,690.00	$ 14.70	$ 4,968.60
6	Plans	Aggregate Base Course	171	CuYd	$ 47.51	$ 8,124.21	$ 72.00	$ 12,312.00	$ 36.75	$ 6,284.25
7	Plans	Site Grading	1	L.S.	$ 3,590.82	$ 3,590.82	$ 5,000.00	$ 5,000.00	$ 15,925.00	$ 15,925.00
8	Plans	High Flow Silt Fence	303	Ft	$ 9.88	$ 2,993.64	$ 7.25	$ 2,196.75	$ 12.25	$ 3,711.75
Bid Schedule A - Site Work Total					**$**	**93,455.88**	**$**	**53,771.15**	**$**	**106,636.46**

Bid Schedule B - Hangar Construction (162' x 50')

					Pro Contracting		VanderPol Dragline, Inc.		Schmitz Construction, LLC	
Item #	**Spec#**	**Item Description**	**Quantity**	**Unit**	**Unit Price**	**Total Price**	**Unit Price**	**Total Price**	**Unit Price**	**Total Price**
1	Plans	3-Unit Revenue Producing Hangar, Complete	1	L.S.	$ 724,419.34	$724,419.34	$1,021,675.00	$1,021,675.00	$ 1,062,622.61	$ 1,062,622.61
Bid Schedule B - Hangar Construction (162' x 50') Total					**$**	**724,419.34**	**$**	**1,021,675.00**	**$**	**1,062,622.61**

Alternate Bid No. A1 - Site Work (54' x 50' Hangar Bay)

					Pro Contracting		VanderPol Dragline, Inc.		Schmitz Construction, LLC	
Item #	**Spec #**	**Item Description**	**Quantity**	**Unit**	**Unit Price**	**Total Price**	**Unit Price**	**Total Price**	**Unit Price**	**Total Price**
A1	C-105	Mobilization	1	L.S.	$ 4,819.30	$ 4,819.30	$ 3,000.00	$ 3,000.00	$ -	$ -
A2	P-101	Asphalt Pavement Removal	125	SqYd	$ 14.36	$ 1,795.00	$ 13.00	$ 1,625.00	$ 12.25	$ 1,531.25
A3	P-101	6" Concrete Valley Gutter Removal	18	SqYd	$ 114.49	$ 2,060.82	$ 25.00	$ 450.00	$ 14.70	$ 264.60
A4	Plans	4" Asphalt Concrete Repair	18	SqYd	$ 345.78	$ 6,224.04	$ 70.00	$ 1,260.00	$ 68.06	$ 1,225.08
A5	Plans	6" Concrete Valley Gutter	27	SqYd	$ 114.49	$ 3,091.23	$ 115.00	$ 3,105.00	$ 127.40	$ 3,439.80
A6	Plans	6" Concrete Approach Pavement	108	SqYd	$ 114.49	$ 12,364.92	$ 68.20	$ 7,365.60	$ 92.96	$ 10,039.68
A7	P-605	Silicone Joint Sealing Filler	162	Ft	$ 10.56	$ 1,710.72	$ 6.00	$ 972.00	$ 6.13	$ 993.06
A8	P-154	Geotextile Separator Fabric	141	SqYd	$ 12.01	$ 1,693.41	$ 5.00	$ 705.00	$ 14.70	$ 2,072.70
A9	P-208	Aggregate Base Course	66	CuYd	$ 54.12	$ 3,571.92	$ 72.00	$ 4,752.00	$ 36.75	$ 2,425.50
A10	D-701	18" RCP	16	Ft	$ 187.02	$ 2,992.32	$ 65.00	$ 1,040.00	$ 101.06	$ 1,616.96
A11	D-751	2' x 3' Type B Inlet w/Type E Frame and Grate	1	Each	$ 3,122.05	$ 3,122.05	$ 3,990.00	$ 3,990.00	$ 8,575.00	$ 8,575.00
A12	D-751	Remove and Salvage Existing Inlet Frame and Grate	1	Each	$ 1,795.41	$ 1,795.41	$ 1,000.00	$ 1,000.00	$ 612.50	$ 612.50
A13	D-751	Install Solid Frame and Lid on Existing Inlet Box	1	Each	$ 1,795.41	$ 1,795.41	$ 2,300.00	$ 2,300.00	$ 3,062.50	$ 3,062.50
A14	Plans	Site Grading	1	L.S.	$ 2,393.88	$ 2,393.88	$ 1,500.00	$ 1,500.00	$ 4,900.00	$ 4,900.00
A15	Plans	Inlet Protection	1	Each	$ 3,590.82	$ 3,590.82	$ 300.00	$ 300.00	$ 612.50	$ 612.50
Alternate Bid No. A1 - Site Work (54' x 50' Hangar Bay) Total					**$**	**53,021.25**	**$**	**33,364.60**	**$**	**41,371.13**

REVENUE PRODUCING HANGAR
MITCHELL MUNICIPAL AIRPORT
MITCHELL, SOUTH DAKOTA
AIP #3-46-037-033-2025
HELMS #A-9432
BID TABULATION
FEBRUARY 5, 2025

Alternate Bid No. B1 - Hangar Construction (54' x 50' Hangar Bay)					Pro Contracting		VanderPol Dragline, Inc.		Schmitz Construction, LLC	
Item #	Spec #	Item Description	Quantity	Unit	Unit Price	Total Price	Unit Price	Total Price	Unit Price	Total Price
1	Plans	1-Unit Revenue Producing Hagar, Complete	1	L.S.	$ 219,327.54	$ 219,327.54	$ 270,000.00	$ 270,000.00	$ 277,533.55	$ 277,533.55
Alternate Bid No. B1 - Hangar Construction (54' x 50' Hangar Bay) Total					**$**	**219,327.54**	**$**	**270,000.00**	**$**	**277,533.55**

Alternate Bid No. B2 - Hangar Insulation					Pro Contracting		VanderPol Dragline, Inc.		Schmitz Construction, LLC	
Item #	Spec #	Item Description	Quantity	Unit	Unit Price	Total Price	Unit Price	Total Price	Unit Price	Total Price
1	Plans	3-Unit Revenue Producing Hangar Insulation, Complete	1	L.S.	$ 42,621.51	$ 42,621.51	$ 21,000.00	$ 21,000.00	$ -	$ -
Alternate Bid No. B2 - Hangar Insulation Total					**$**	**42,621.51**	**$**	**21,000.00**	**$**	**-**

Alternate Bid No. B3 - Hangar Insulation (54' x 50' Hangar Bay)					Pro Contracting		VanderPol Dragline, Inc.		Schmitz Construction, LLC	
Item #	Spec #	Item Description	Quantity	Unit	Unit Price	Total Price	Unit Price	Total Price	Unit Price	Total Price
1	Plans	1-Unit Revenue Producing Hangar Insulation, Complete	1	L.S.	$ 12,567.88	$ 12,567.88	$ 7,000.00	$ 7,000.00	$ -	$ -
Alternate Bid No. B3 - Hangar Insulation (54' x 50' Hangar Bay) Total					**$**	**12,567.88**	**$**	**7,000.00**	**$**	**-**

Alternate Bid No. B4 - Hangar Heater Units					Pro Contracting		VanderPol Dragline, Inc.		Schmitz Construction, LLC	
Item #	Spec #	Item Description	Quantity	Unit	Unit Price	Total Price	Unit Price	Total Price	Unit Price	Total Price
1	Plans	3-Unit Revenue Producing Hangar Heater Unit, Complete	3	Each	$ 11,657.16	$ 34,971.48	$ 11,750.00	$ 35,250.00	$ 200.00	$ 600.00
Alternate Bid No. B4 - Hangar Heater Units Total					**$**	**34,971.48**	**$**	**35,250.00**	**$**	**600.00**

Alternate Bid No. B5 - Hangar Heater Unit (54' x 50' Hangar Bay)					Pro Contracting		VanderPol Dragline, Inc.		Schmitz Construction, LLC	
Item #	Spec #	Item Description	Quantity	Unit	Unit Price	Total Price	Unit Price	Total Price	Unit Price	Total Price
1	Plans	1-Unit Revenue Producing Hangar Heater Unit, Complete	1	Each	$ 8,415.02	$ 8,415.02	$ 8,375.00	$ 8,375.00	$ 200.00	$ 200.00
Alternate Bid No. B5 - Hangar Heater Unit (54' x 50' Hangar Bay) Total					**$**	**8,415.02**	**$**	**8,375.00**	**$**	**200.00**

	Pro Contracting	VanderPol Dragline, Inc.	Schmitz Construction, LLC
Total Bid Schedule A and B (3-Unit Hangar and Site Work)	**$ 817,875.22**	**$ 1,075,446.15**	**$ 1,169,259.07**
Total Bid Schedule A, B, A1, and B1 (4-Unit Hangar and Site Work)	**$ 1,090,224.01**	**$ 1,378,810.75**	**$ 1,488,163.75**
Total Bid Schedule A, B, B2, and B4 (3-Unit Hangar and Site Work w/ Insulation and Heaters)	**$ 895,468.21**	**$ 1,131,696.15**	**$ 1,169,859.07**
Total All Bid Schedules (4-Unit Hangar and Site Work w/ Insulation and Heaters)	**$ 1,188,799.90**	**$ 1,450,435.75**	**$ 1,488,963.75**

REVENUE PRODUCING HANGAR
MITCHELL MUNICIPAL AIRPORT
MITCHELL, SOUTH DAKOTA
AIP #3-46-037-033-2025
HELMS #A-9432
BID TABULATION
FEBRUARY 5, 2025

Bid Schedule A - Site Work

					Hegg Construction, LLC Sioux Falls, SD		First Dakota Enterprises, Inc. Fort Pierre, SD	
Item #	**Spec #**	**Item Description**	**Quantity**	**Unit**	**Unit Price**	**Total Price**	**Unit Price**	**Total Price**
1	C-105	Mobilization	1	L.S.	$ 107,082.00	$ 107,082.00	$ 10,000.00	$ 10,000.00
2	S-100	Construction Safety Phasing Plan	1	L.S.	$ 19,700.00	$ 19,700.00	$ 12,400.00	$ 12,400.00
3	Plans	6" Concrete Approach Pavement	322	SqYd	$ 69.00	$ 22,218.00	$ 126.78	$ 40,823.16
4	P-605	Silicone Joint Sealing Filler	432	Ft	$ 11.00	$ 4,752.00	$ 5.17	$ 2,233.44
5	SP-2	Geotextile Separator Fabric	338	SqYd	$ 13.00	$ 4,394.00	$ 8.99	$ 3,038.62
6	Plans	Aggregate Base Course	171	CuYd	$ 18.00	$ 3,078.00	$ 39.24	$ 6,710.04
7	Plans	Site Grading	1	L.S.	$ 12,660.00	$ 12,660.00	$ 28,968.00	$ 28,968.00
8	Plans	High Flow Silt Fence	303	Ft	$ 4.00	$ 1,212.00	$ 21.02	$ 6,369.06
Bid Schedule A - Site Work Total					**$**	**175,096.00**	**$**	**110,542.32**

Bid Schedule B - Hangar Construction (162' x 50')

					Hegg Construction, LLC		First Dakota Enterprises, Inc.	
Item #	**Spec#**	**Item Description**	**Quantity**	**Unit**	**Unit Price**	**Total Price**	**Unit Price**	**Total Price**
1	Plans	3-Unit Revenue Producing Hangar, Complete	1	L.S.	$1,039,499.89	$1,039,499.89	$ 1,071,919.00	$ 1,071,919.00
Bid Schedule B - Hangar Construction (162' x 50') Total					**$**	**1,039,499.89**	**$**	**1,071,919.00**

Alternate Bid No. A1 - Site Work (54' x 50' Hangar Bay)

					Hegg Construction, LLC		First Dakota Enterprises, Inc.	
Item #	**Spec #**	**Item Description**	**Quantity**	**Unit**	**Unit Price**	**Total Price**	**Unit Price**	**Total Price**
A1	C-105	Mobilization	1	L.S.	$ 1,575.00	$ 1,575.00	$ 7,000.00	$ 7,000.00
A2	P-101	Asphalt Pavement Removal	125	SqYd	$ 11.00	$ 1,375.00	$ 21.38	$ 2,672.50
A3	P-101	6" Concrete Valley Gutter Removal	18	SqYd	$ 13.00	$ 234.00	$ 79.89	$ 1,438.02
A4	Plans	4" Asphalt Concrete Repair	18	SqYd	$ 75.00	$ 1,350.00	$ 127.44	$ 2,293.92
A5	Plans	6" Concrete Valley Gutter	27	SqYd	$ 110.00	$ 2,970.00	$ 122.85	$ 3,316.95
A6	Plans	6" Concrete Approach Pavement	108	SqYd	$ 76.00	$ 8,208.00	$ 128.65	$ 13,894.20
A7	P-605	Silicone Joint Sealing Filler	162	Ft	$ 10.00	$ 1,620.00	$ 5.17	$ 837.54
A8	P-154	Geotextile Separator Fabric	141	SqYd	$ 12.00	$ 1,692.00	$ 14.29	$ 2,014.89
A9	P-208	Aggregate Base Course	66	CuYd	$ 17.00	$ 1,122.00	$ 39.24	$ 2,589.84
A10	D-701	18" RCP	16	Ft	$ 82.50	$ 1,320.00	$ 135.00	$ 2,160.00
A11	D-751	2' x 3' Type B Inlet w/Type E Frame and Grate	1	Each	$ 7,000.00	$ 7,000.00	$ 3,062.00	$ 3,062.00
A12	D-751	Remove and Salvage Existing Inlet Frame and Grate	1	Each	$ 500.00	$ 500.00	$ 620.00	$ 620.00
A13	D-751	Install Solid Frame and Lid on Existing Inlet Box	1	Each	$ 2,500.00	$ 2,500.00	$ 8,432.00	$ 8,432.00
A14	Plans	Site Grading	1	L.S.	$ 4,000.00	$ 4,000.00	$ 13,640.00	$ 13,640.00
A15	Plans	Inlet Protection	1	Each	$ 90.00	$ 90.00	$ 1,364.00	$ 1,364.00
Alternate Bid No. A1 - Site Work (54' x 50' Hangar Bay) Total					**$**	**35,556.00**	**$**	**65,335.86**

REVENUE PRODUCING HANGAR
MITCHELL MUNICIPAL AIRPORT
MITCHELL, SOUTH DAKOTA
AIP #3-46-037-033-2025
HELMS #A-9432
BID TABULATION
FEBRUARY 5, 2025

Alternate Bid No. B1 - Hangar Construction (54' x 50' Hangar Bay)

Item #	Spec #	Item Description	Quantity	Unit	Hegg Construction, LLC Unit Price	Hegg Construction, LLC Total Price	First Dakota Enterprises, Inc. Unit Price	First Dakota Enterprises, Inc. Total Price
1	Plans	1-Unit Revenue Producing Hagar, Complete	1	L.S.	$ 254,464.96	$ 254,464.96	$ 277,764.00	$ 277,764.00
Alternate Bid No. B1 - Hangar Construction (54' x 50' Hangar Bay) Total					**$**	**254,464.96**	**$**	**277,764.00**

Alternate Bid No. B2 - Hangar Insulation

Item #	Spec #	Item Description	Quantity	Unit	Hegg Construction, LLC Unit Price	Hegg Construction, LLC Total Price	First Dakota Enterprises, Inc. Unit Price	First Dakota Enterprises, Inc. Total Price
1	Plans	3-Unit Revenue Producing Hangar Insulation, Complete	1	L.S.	$ 53,038.61	$ 53,038.61	$ 62,000.00	$ 62,000.00
Alternate Bid No. B2 - Hangar Insulation Total					**$**	**53,038.61**	**$**	**62,000.00**

Alternate Bid No. B3 - Hangar Insulation (54' x 50' Hangar Bay)

Item #	Spec #	Item Description	Quantity	Unit	Hegg Construction, LLC Unit Price	Hegg Construction, LLC Total Price	First Dakota Enterprises, Inc. Unit Price	First Dakota Enterprises, Inc. Total Price
1	Plans	1-Unit Revenue Producing Hangar Insulation, Complete	1	L.S.	$ 16,408.77	$ 16,408.77	$ 20,667.00	$ 20,667.00
Alternate Bid No. B3 - Hangar Insulation (54' x 50' Hangar Bay) Total					**$**	**16,408.77**	**$**	**20,667.00**

Alternate Bid No. B4 - Hangar Heater Units

Item #	Spec #	Item Description	Quantity	Unit	Hegg Construction, LLC Unit Price	Hegg Construction, LLC Total Price	First Dakota Enterprises, Inc. Unit Price	First Dakota Enterprises, Inc. Total Price
1	Plans	3-Unit Revenue Producing Hangar Heater Unit, Complete	3	Each	$ 8,638.00	$ 25,914.00	$ 10,925.00	$ 32,775.00
Alternate Bid No. B4 - Hangar Heater Units Total					**$**	**25,914.00**	**$**	**32,775.00**

Alternate Bid No. B5 - Hangar Heater Unit (54' x 50' Hangar Bay)

Item #	Spec #	Item Description	Quantity	Unit	Hegg Construction, LLC Unit Price	Hegg Construction, LLC Total Price	First Dakota Enterprises, Inc. Unit Price	First Dakota Enterprises, Inc. Total Price
1	Plans	1-Unit Revenue Producing Hangar Heater Unit, Complete	1	Each	$ 8,206.00	$ 8,206.00	$ 10,925.00	$ 10,925.00
Alternate Bid No. B5 - Hangar Heater Unit (54' x 50' Hangar Bay) Total					**$**	**8,206.00**	**$**	**10,925.00**

	Hegg Construction, LLC	First Dakota Enterprises, Inc.
Total Bid Schedule A and B (3-Unit Hangar and Site Work)	**$ 1,214,595.89**	**$ 1,182,461.32**
Total Bid Schedule A, B, A1, and B1 (4-Unit Hangar and Site Work)	**$ 1,504,616.85**	**$ 1,525,561.18**
Total Bid Schedule A, B, B2, and B4 (3-Unit Hangar and Site Work w/ Insulation and Heaters)	**$ 1,293,548.50**	**$ 1,277,236.32**
Total All Bid Schedules (4-Unit Hangar and Site Work w/ Insulation and Heaters)	**$ 1,608,184.23**	**$ 1,651,928.18**

I HEREBY CERTIFY THAT THE FOREGOING IS AN ACCURATE REPRESENTATION AND TABULATION OF ALL BIDS RECEIVED AND THAT THE MATHEMATICS HAVE BEEN CHECKED AND IS TO THE BEST OF MY KNOWLEDGE CORRECT:

PROJECT ENGINEER: Brooke Edgar DATE: 2/6/2025

MITCHELL AIRPORT HANGAR BUILDING

Mitchell, South Dakota

HKG Architects, INC
Architects, A.I.A.
Aberdeen, South Dakota

NORTH

1 Site
1" = 30'-0"

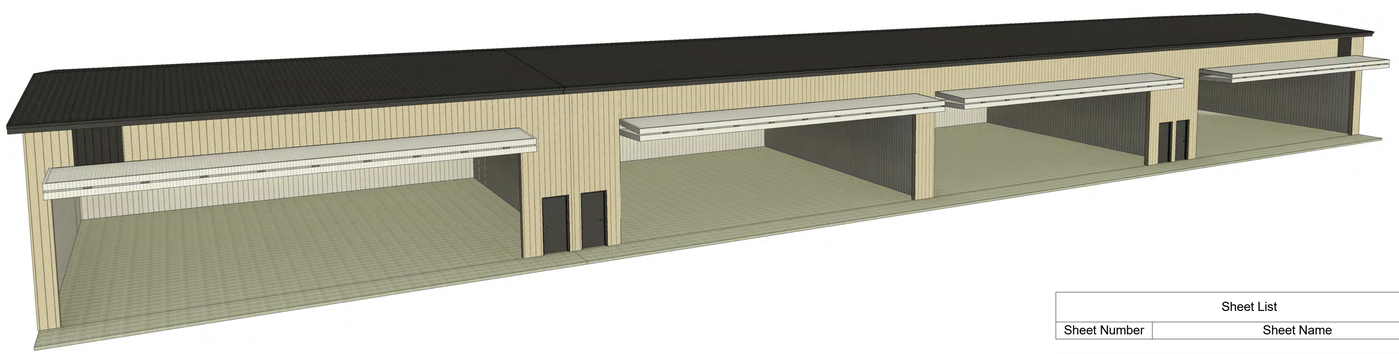

Project Directory

ARCHITECT: HKG ARCHITECTS, INC
524 S. ARCH ST.,
ABERDEEN, SD 57401
(605) 225-6820
FAX: (605) 225-7770

STRUCTURAL: SOLIEN & LARSON
3330FIECHTNER DRIVE
STE 206
FARGO, ND 58103
(701) 235-5593

ELECTRICAL: ENGINEERING SERVICES
2821 8TH AVE NE,
Aberdeen SD 57401
877-876-3434 ext. 103
blake@efraimsonelectric.com

MECHANICAL: ROBY, QUINTAL, & EVERSON
2000 N KIMBALL ST,
Mitchell, SD 57301
(605) 996-7543

CIVIL: HELMS & ASSOCIATES
416 PRODUCTION ST. N.
PO BOX 111
ABERDEEN, SD 57401
(605) 225-1212

Sheet List	
Sheet Number	Sheet Name
A0	TITLE SHEET & CODE REVIEW
A1	ELVATIONS AND SECTIONS
A2	FLOOR PLAN AND ROOF PLAN
A3	DETAILS AND SCHEDULES
S1	FOUNDATION PLAN
S2	FOUNDATION PLAN
M100	MECHANICAL FLOOR PLAN
E1	SCHEDULES & LEGENDS
E2	ELECTRICAL PLAN

REGISTERED PROFESSIONAL ARCHITECT
REG. NO. 5473
DEAN MARSKE
SOUTH DAKOTA
1/26/24

REVISED DATE:	Plans for MITCHELL AIRPORT NEW HANGAR MITCHELL, SD	TITLE SHEET & CODE REVIEW	DRAWN BY: CH TRACED BY: ____ CHECKED BY: DM A0 OF- 4
CERT. NO.	HKG Architects, Inc. Aberdeen, S.D.	DATE: 1/26/24	PROJECT NO.: 2023-0034

CITY OF MITCHELL

City Council Meeting
Agenda Item Request

The deadline for agenda items is Wednesday at noon, prior to the City Council Meeting

Meeting Date Requested:	February 18, 2025	**Requested By:**	Stephanie Ellwein

Desired Action of City Council:

Amount Budgeted in current fiscal year for this item (if applicable):

Agenda Item:

Designate Golf Fund Reserves for the following Projects:

- $50,000 towards future Golf Cart Replacements
- $250,000 towards Golf Course Phase III project

Explanation/Background of Agenda Item Requested:

Kevin Nelson, Park & Recreation Director, has requested that the City Council designate funds in the Golf Course Fund Reserve towards golf cart replacements and a future phase III project for improvements at the Golf Course.

The current fund balance estimate is $416,104 which creates a 73% unobligated cash reserve after the 2025 proposed supplements that will be heard on March 3, 2025. After the requested designations, the estimated reserve balance will be $116,104 which would create a 20% unobligated cash reserve.

These funds can be un-designated at any time in the future and used as the City Council determines is necessary. The designation just shows the intended use of those funds.

CITY OF MITCHELL

City Council Meeting
Agenda Item Request

The deadline for agenda items is Wednesday at noon, prior to the City Council Meeting

Meeting Date Requested: February 18, 2025 **Requested By:** Stephanie Ellwein

Desired Action of City Council:

Amount Budgeted in current fiscal year for this item (if applicable):

Typically when we consider supplemental appropriations they are for projects that were not completed in the previous year, or projects that are cut from the budget to balance during the budget hearing process. Some of the requests received for the 2025 Supplemental Budget were items that were not discussed as part of the normal budget hearing process. Due to this, staff is asking that the City Council discuss these items and provide guidance about whether or not they should be included in the supplemental budget in March. The current supplemental requests would require approximately $2.7 million from general fund reserves due to requests being above the ending total budgets for 2024. If approved, it will reduce the available undesignated reserve balance in General Fund. If the supplements are not included it would add to the amount available to designate for future capital projects.

- Tennis Court Resurfacing and New Lights in the amount of $783,686. This item was discussed at a recent work session due to deterioration of the oldest tennis courts.
- Hitchcock Park Lighting Project in the amount of $326,793. This item was discussed at a recent work session. The lights would be added on the road through the park and the perimeter of the pool.
- Ice Arena Roof Project in the amount of $1,500,000. This number could be much higher, or less depending on the final outcome of the project design.
- Additional Hangar at the airport $100,000. Public works would like to consider a change order for an additional hangar at the airport.
- Corn Palace Seat Replacements $550,000. This will be discussed at the Council Meeting as a separate agenda item.
- Additional Trees Purchase $10,000. Mayor Hanson would like Park & Recreation to proceed with additional tree purchases above what is currently budgeted in 2025.
- Concession Stand Upgrades at Soccer Complex $15,000. This is a request from the Park & Rec department to make the facility more usable.

Agenda Item:

Discussion on Unbudgeted Requests for the 2025 Supplemental Budget.

- Tennis Court Resurfacing and New Lights in the amount of $783,686
- Hitchcock Park Lighting Project in the amount of $326,793
- Ice Arena Roof Project in the amount of $1,500,000
- Additional Hangar at the airport $100,000
- Corn Palace Seat Replacements $550,000
- Additional Trees Purchase $10,000
- Concession Stand Upgrades at Soccer Complex $15,000

Explanation/Background of

Agenda Item Requested: